Smarter. Greener. Together.


## Industrial Automation Headquarters

**Delta Electronics, Inc.**
Taoyuan Technology Center
No.18, Xinglong Rd., Taoyuan City,
Taoyuan County 33068, Taiwan
TEL: 886-3-362-6301 / FAX: 886-3-371-6301

## Asia

**Delta Electronics (Jiangsu) Ltd.**
Wujiang Plant 3
1688 Jiangxing East Road,
Wujiang Economic Development Zone
Wujiang City, Jiang Su Province,
People's Republic of China (Post code: 215200)
TEL: 86-512-6340-3008 / FAX: 86-769-6340-7290

**Delta Greentech (China) Co., Ltd.**
238 Min-Xia Road, Pudong District,
ShangHai, P.R.C.
Post code : 201209
TEL: 86-21-58635678 / FAX: 86-21-58630003

**Delta Electronics (Japan), Inc.**
Tokyo Office
2-1-14 Minato-ku Shibadaimon,
Tokyo 105-0012, Japan
TEL: 81-3-5733-1111 / FAX: 81-3-5733-1211

**Delta Electronics (Korea), Inc.**
1511, Byucksan Digital Valley 6-cha, Gasan-dong,
Geumcheon-gu, Seoul, Korea, 153-704
TEL: 82-2-515-5303 / FAX: 82-2-515-5302

**Delta Electronics Int'l (S) Pte Ltd**
4 Kaki Bukit Ave 1, #05-05, Singapore 417939
TEL: 65-6747-5155 / FAX: 65-6744-9228

**Delta Electronics (India) Pvt. Ltd.**
Plot No 43 Sector 35, HSIIDC
Gurgaon, PIN 122001, Haryana, India
TEL : 91-124-4874900 / FAX : 91-124-4874945

## Americas

**Delta Products Corporation (USA)**
Raleigh Office
P.O. Box 12173,5101 Davis Drive,
Research Triangle Park, NC 27709, U.S.A.
TEL: 1-919-767-3800 / FAX: 1-919-767-8080

**Delta Greentech (Brasil) S.A**
Sao Paulo Office
Rua Itapeva, 26 - 3° andar Edificio Itapeva One-Bela Vista
01332-000-São Paulo-SP-Brazil
TEL: +55 11 3568-3855 / FAX: +55 11 3568-3865

## Europe

**Delta Electronics (Netherlands) B.V.**
Eindhoven Office
De Witbogt 20, 5652 AG Eindhoven, The Netherlands
TEL: +31 (0)40-8003800 / FAX: +31 (0)40-8003898


*We reserve the right to change the information in this catalogue without prior notice.

DELTA_IA-MDS_VFD-HES_UM_EN_20190222

Delta Hybrid Energy Saving System HES Series User Manual

# Delta Hybrid Energy Saving System
# HES Series User Manual

www.deltaww.com

Smarter. Greener. Together.

## Copyright notice

©Delta Electronics, Inc. All rights reserved.

All information contained in this user manual is the exclusive property of Delta Electronics Inc. (hereinafter referred to as "Delta ") and is protected by copyright law and all other laws. Delta retains the exclusive rights of this user manual in accordance with the copyright law and all other laws. No parts in this manual may be reproduced, transmitted, transcribed, translated or used in any other ways without the prior consent of Delta.

## Limitation of Liability

The contents of this user manual are only for the use of the AC motor drives manufactured by Delta. Except as defined in special mandatory laws, Delta provides this user manual “as is” and does not offer any kind of warranty through this user manual for using the product, either express or implied, including but not limited to the following: (i) this product will meet your needs or expectations; (ii) the information contained in the product is current and correct; (iii) the product does not infringe any rights of any other person. You shall bear your own risk to use this product.

In no event shall Delta, its subsidiaries, affiliates, managers, employees, agents, partners and licensors be liable for any direct, indirect, incidental, special, derivative or consequential damages ( including but not limited to the damages for loss of profits, goodwill, use or other intangible losses) unless the laws contains special mandatory provisions to the contrary.

Delta reserves the right to make changes to the user manual and the products described in the user manual without prior notice and afterwards.

# Preface

Thank you for choosing the Hybrid Energy System (HES) designed exclusively for the Delta Injection Machine, which consists of Hybrid Servo Controller (VFD-VJ) series and servo oil pump.

These production instructions provide the users with complete information regarding the installation, parameter configuration, anomaly diagnosis, troubleshooting, and routine maintenance of the Hybrid Servo Driver. To ensure correct installation and operation of the hybrid servo driver, please read the instructions carefully before installing the machine. In addition, please store the enclosed CD-ROM properly and pass down to the machine users.

The Hybrid servo driver is a delicate power electronics product. For the safety of the operators and the security of the machine, please only allow professional electrical engineers to conduct installation, tests, and adjust machine parameters. Please carefully read the contents of the instructions that are marked with "Danger" and "caution". Please contact your local Delta agents for any questions and our professional team will be happy to assist you.

## PLEASE READ PRIOR TO INSTALLATION FOR SAFETY.

- ☑ Make sure to turn off the power before starting wiring.
- ☑ Once the AC power is turned off, when the POWER indicator of the Hybrid Servo Controller is still on, it means there is still high voltage inside the Hybrid Servo Controller, which is very dangerous and do not touch the internal circuits and components. To conduct the maintenance safely, please make sure the voltage between ＋1 and － is lower than 25Vdc using the handheld multimeter before starting the operation.
- ☑ The internal circuit board of Hybrid Servo Controller houses CMOS IC, which is vulnerable to electrostatics. Please do not touch the circuit board by and without any anti-electrostatics measures.
- ☑ Never modify the components or wiring inside the Hybrid Servo Controller.
- ☑ The E⏚ terminal of Hybrid Servo Controller must be grounded correctly. The 230V series uses the third type of ground scheme while the 460V series uses special ground.
- ☑ This series of products cannot be operated in environments that endanger human safety.
- ☑ Please keep children or strangers from approaching Hybrid Servo Controller.

- ☑ Never connect AC power to the output terminals U/T1, V/T2, and W/T3 of Hybrid Servo Controller.
- ☑ Please do not conduct stress test on the internal components of Hybrid Servo Controller, for the semiconductor devices therein may be damaged by high-voltage breakdown.
- ☑ Even when the servo oil pump is off, the main loop terminal of Hybrid Servo Controller can still be loaded with high voltage that can be seriously dangerous.
- ☑ Only qualified professional electrical engineers can conduct tasks of installation, wiring, and maintenance of Hybrid Servo Controller。

| | |
|---|---|
| | ☑ When Hybrid Servo Controller uses external terminals as its run command sources, the servo oil pump may start running immediately after the power is connected, which may be dangerous with any personnel present. |
| CAUTION | ☑ Please choose a safe area to install Hybrid Energy System, where there is no high temperature, direct sunlight, moisture, and water dripping and splash.<br>☑ Please follow the instructions when installing Hybrid Energy System. Any unapproved operation environment may lead to fire, gas explosion, and electroshock.<br>☑ When the wiring between the hybrid controller and the hybrid servo motor is too long, it may compromise the interlayer insulation of the motor. Please install a reactor between them (please refer to Appendix A) to avoid burning of the hybrid servo motor from damaged insulation.<br>☑ The voltage rating of the power supply of Hybrid Servo Controller 230 series cannot be higher than 240V (no higher than 480V for 460 series) and the associated current cannot exceed 5000A RMS ( no higher than 10000A RMS for models with 40HP (30kW)) |

**NOTE**

- To provide detailed product descriptions, the illustrations are made with the exterior cover or safety shield removed. When the product is running, please make sure the exterior cover is secured and the wiring is correct to ensure safety by following the instructions of the manual.
- The figures in the manual are made for illustration purposes and will be slightly different from the actual products. However, the discrepancy will not affect the interests of clients.
- Since our products are being constantly improved, for information about any changes in specifications, please contact our local agents or visit http://www.deltaww.com/iadownload_acmotordrive to download the most recent versions.

# Table of Contents

*Chapter 1 Use and Installation*

1-1 Exterior of Product ..... 1-2

1-2 Specifications ..... 1-3

1-3 Introduction of Hybrid Energy System ..... 1-8

1-4 Installation ..... 1-9

*Chapter 2 Wiring*

2-1 Wiring ..... 2-2

2-2 Wiring of Servo oil Pump ..... 2-9

2-3 Main Circuit ..... 2-12

2-4 ControlTerminals ..... 2-17

*Chapter 3 Start Up*

3-1 Description of Control Panel ..... 3-2

3-2 Adjustment Flow Chart ..... 3-5

3-3 Explanations for the Adjustment Steps ..... 3-6

*Chapter 4 Parameter Functions*

4-1 Summary of Parameter Settings ..... 4-2

4-2 Detailed Description of Parameters ..... 4-12

*Chapter 5 Methods of Anomaly Diagnosis*

5-1 Unusual Signal ..... 5-2

5-2 Over Current (oc) ..... 5-9

5-3 Ground Fault (GFF) ..... 5-9

5-4 Over Voltage (ov) ..... 5-10

5-5 Low Voltage (Lv) ..... 5-11

5-6 Overheat (oH1) ..... 5-12

5-7 Overload (oL) ..... 5-12

5-8 Phase Loss (PHL) ..... 5-13

5-9 Resolutions for Electromagnetic Noise and Induction Noise ..... 5-14

5-10 Environment and Facilities for Installation ..... 5-15

*Chapter 6 Maintenance*

6-1 Maintenance and Inspection ..... 6-2

6-2 Greasy Dirt Problem ..... 6-2

6-1 Fiber Dust Problem ..... 6-2

6-1 Erosion Problem ..... 6-2

6-1 Industriasl Dust Problem ..... 6-2

6-1 Wiring and Installation Problem ..... 6-2

6-1 Multi-funciton Input/ Output Terminals Problem ..... 6-2

*Appendix A. Instructions of Product Packaging*

A-1 Descriptions of Product Packaging: v.A ..... A-2

A-2 Unpacking: v.A ..... A-3

A-3 Detailed List of Product Packaging: v.A ..... A-4

A-4 Detailed List of Product Packaging: v.C ..... A-50

*Appendix B Optional Accessories*

B-1 Non-fuse Circuit Breaker ..... B-2

B-2 Reactor ..... B-3

B-3 Digital Keypad KPV-CE01 ..... B-9

B-4 Communication Card ..... B-13

B-5 EMI Filter ..... B-14

B-6 Brake Unit ..... B-16

# *Chapter 1 Use and Installation*

1-1 Exterior of Product

1-2 Product Specifications

1-3 Introduction of Hybrid Energy System

1-4 Product Installation

Upon receipt of the product, the clients are advised to keep the product in its original packaging box. If the machine won't be used temporarily, for future maintenance safety and compliance with the manufacturer's warranty policy, pay attention to the following for product storage:

**CAUTION**

- ☑ Store in a clean and dry location free from direct sunlight or corrosive fumes.
- ☑ Store within an ambient temperature range of -20˚C to +60˚C.
- ☑ Store within a relative humidity range of 0% to 90% and non-condensing environment.
- ☑ Avoid storing the product in environments with caustic gases and liquids.
- ☑ Avoid placing the product directly on the ground. The product should be placed on suitable benches and desiccators should be placed in the packaging bags in harsh storage environments.
- ☑ Avoid installing the product in places with direct sunlight or vibrations.
- ☑ Even if the humidity is within the required value, condensation and freezing can still happen when there is drastic change of temperature. Avoid storing products in such environment.
- ☑ If the product has been taken out of the packaging box and in use for over three months, the temperature of the storage environment must be below 30°C. This considers the fact when the electrolytic capacitor is stored with no current conduction and the ambient temperature is too high, its properties may deteriorate. Do not store the product in the situation of no current conduction for more than one year.

# 1-1 Exterior of Product

All Hybrid Energy System has passed strict quality control before being shipped out from the factory, with enforced packaging that sustains impacts. Upon opening the packaging of the Hybrid Energy System, the customers are recommended to conduct the examination by the following steps:

- ☑ Check if there is any damage to Hybrid Energy System during shipping.
- ☑ Upon opening the box, check if the model number of Hybrid Energy System matches that listed on the external box.
- ☑ See Appendix A for the description and the detailed list of product packaging

For any mismatch of the listed data with your order or any other issues with the product, contact your local agent or retailer.

## Model Explanation

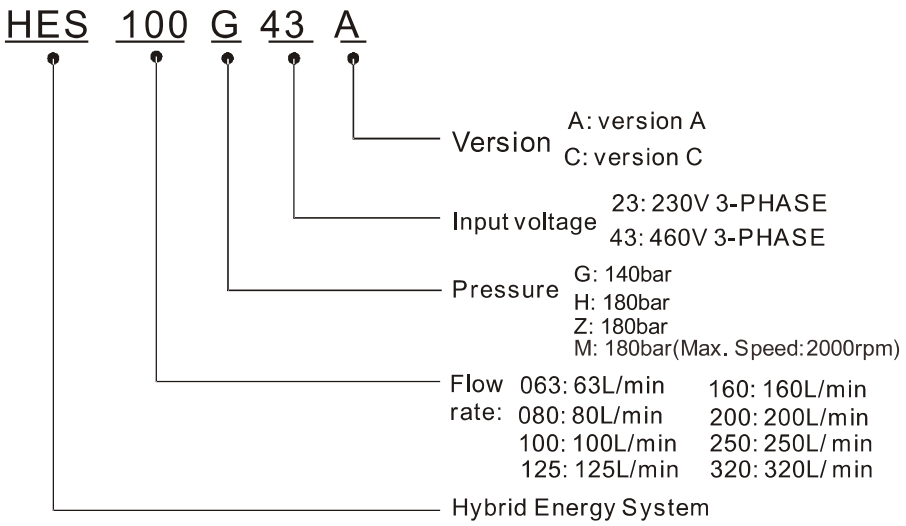

# 1-2 Specifications

### 230V Series Specifications HES____23A

| Model Name | | | HES____23A | | | | | | | | | | |
|---|---|---|---|---|---|---|---|---|---|---|---|---|---|
| | | | 063H | 080G | 080H | 100G | 100H | 100Z | 125G | 125H | 160G | 160H | 200G |
| Oil Pump Capacity | | cc/rev | 25 | 32 | | 40 | | | 50 | | 64 | | 80 |
| Flow Rate Specifications | Flow Rate | L/min | 63 | 80 | | 100 | | | 125 | | 160 | | 200 |
| | Linearity | % | Below 1% F.S. | | | | | | | | | | |
| | Magnetic Hysteresis | % | Below 1% F.S. | | | | | | | | | | |
| Pressure Specifications | Maximum Pressure | Mpa | 18 | 14 | 18 | 14 | 18 | 18 | 14 | 18 | 14 | 18 | 14 |
| | Minimum Pressure | Mpa | 0.1 | | | | | | | | | | |
| | Linearity | % | Below 1% F.S. | | | | | | | | | | |
| | Magnetic Hysteresis | % | Below 1% F.S. | | | | | | | | | | |
| Servo Motor Specifications | Power | kW | 11 | | | | | 15 | | | | 20 | |
| | Insulation Class | | UL: Class A | | | | | | | | | | |
| | Cooling Method | | Fan Cooling | | | | | | | | | | |
| | Ambient Temperature | | 0 ~ 40 °C | | | | | | | | | | |
| | Ambient Humidity | | 20 ~ 90 RH (Non-condensation) | | | | | | | | | | |
| | Weight | kg | 82 | | | 83 | | 95 | 108 | | 110 | | 144 |
| Servo Controller Specifications | VFD-___VL23A(_) | | 110 (06HA) | 110 (08GA) | 150 (08HA) | 150 (10GA) | 185 (10HA) | 220 (10ZA) | 220 (12GA) | 300 (12HA) | 300 (16GA) | 370 (16HA) | 370 (20GA) |
| | Input Voltage (V) | | 3-Phase 200~240V, 50/60Hz | | | | | | | | | | |
| | Rated Output Capacity | kVA | 19 | | 25 | | 29 | 34 | | 46 | | | 56 |
| | Weight | kg | 10 | | 13 | | | | | 36 | | | |
| | Brake Unit | | Built-in | | | | | | | External: VFDB-2022 | | | |
| | Brake resistor | W | 1000 | | | | | | | | | 1500 | |
| | | Ω | 8.3 | | 5.8 | | | | | | | | |
| | Speed Detector | | Resolver | | | | | | | | | | |
| | Pressure Command Input | | 0~10V Support three-point calibration | | | | | | | | | | |
| | Flow Rate Command Input | | 0~10V Support three-point calibration | | | | | | | | | | |
| | Multi-functional Input Terminal | | 5ch DC24V 8mA | | | | | | | | | | |
| | Multi-functional Output Terminal | | 2 ch DC24V 50mA, 1 ch Relay output | | | | | | | | | | |
| | Analog Output Voltage | | 2 ch dc 0~10V | | | | | | | | | | |
| | Cooling Method | | Fan Cooing | | | | | | | | | | |
| | Ambient Temperature | | -10 ~ 45 °C | | | | | | | | | | |
| | Ambient Humidity | | Below 90 RH (Non-condensation) | | | | | | | | | | |
| | Protection Functions | | Over current, over voltage, low current, overload, or overheating of AC motor drive, overload or overheating of motor, operation speed error | | | | | | | | | | |
| Actuation Oil | Working Medium | | HL-HLP DIN51 524 Part1/2 R68,R46 | | | | | | | | | | |
| | Operation Temperature | °C | -20 to 100 | | | | | | | | | | |
| | Viscosity | @40 °C | 67.83 | | | | | | | | | | |
| | | @100 °C | 8.62 | | | | | | | | | | |
| Miscellaneous | | | Available upon purchase: safety valve, Reactor, and EMI filter are optional. | | | | | | | | | | |

## 230V Series HES____23C

| **Model Name** | | | HES____23C | | | | | | |
|---|---|---|---|---|---|---|---|---|---|
| | | | 063H | 080H | 100H | 125H | 160H | 200H | 250G |
| **Oil Pump Capacity** | | **cc/rev** | 25 | 32 | 40 | 50 | 64 | 80 | 100 |
| Flow rate Specifications | **Flow Rate** | **L/min** | 63 | 80 | 100 | 125 | 160 | 200 | 250 |
| | Linearity | **%** | Below 1% F.S. | | | | | | |
| | Magnetic Hysteresis | **%** | Below 1% F.S. | | | | | | |
| Pressure Specifications | Maximum Pressure | **Mpa** | 18 | 18 | 18 | 18 | 18 | 18 | 14 |
| | Minimum Pressure | **Mpa** | 0.1 | | | | | | |
| | Linearity | **%** | Below 1% F.S. | | | | | | |
| | Magnetic Hysteresis | **%** | Below 1% F.S. | | | | | | |
| Servo Motor Specifications | Power | **kW** | 10.4 | 14.6 | 14.6 | 18.4 | 23.1 | 27.6 | 27.6 |
| | Insulation Class | | Class F | | | | | | |
| | Certifications | | CE | | | | | | |
| | Cooling Method | | Fan Cooling | | | | | | |
| | Ambient Temperature | | 0 ~ 40 °C | | | | | | |
| | Ambient Humidity | | 20 ~ 90 RH (Non-condensation) | | | | | | |
| | Weight | kg | 83 | 90 | 90 | 97 | 105 | 121 | 145 |
| Servo Controller Specifications | Model Name VFD-___VL23A(_) | | 110A (06HC) | 150A (08HC) | 150A (10HC) | 220A (12HC) | 300A (16HC) | 300A (20HC) | 370A (25GC) |
| | Input Voltage | | Three Phase AC 220 ~ 240V, 50/60Hz | | | | | | |
| | Rated Output Power | kW | 11 | 15 | 15 | 22 | 30 | 30 | 37 |
| | Brake Unit | | Built-in | | | | External VFDB2022 | | |
| | Brake Resistor | W | 300 | 1000 | | | | | |
| | | Ω | 8.3 | 5.8 | | | | | |
| | Speed Detector | | Resolver | | | | | | |
| | Pressure Command Input | | 0~10V Support three-point calibration | | | | | | |
| | Flow Rate Command Input | | 0~10V Support three-point calibration | | | | | | |
| | Multi-functional Input Terminal | | 5ch DC24V 8mA | | | | | | |
| | Multi-functional Output Terminal | | 2 ch DC24V 50mA, 1 ch Relay output | | | | | | |
| | Analog Output Voltage | | 2 ch dc 0~10V | | | | | | |
| | Cooling Method | | Fan Cooling | | | | | | |
| | Protection Functions | | Over current, over voltage, low current, overload, or overheating of AC motor drive, overload or overheating of motor, operation speed error | | | | | | |
| | Certifications | | CE, UL CERTIFIED SAFETY US-CA E176972 | | | | | | |
| Actuation Oil | Working Medium | | HL-HLP DIN51 524 Part1/2 R68,R46 | | | | | | |
| | Operation Temperature | °C | -12 to 100 | | | | | | |
| | Viscosity | **@40** °C | 67.83 | | | | | | |
| | | **@100** °C | 8.62 | | | | | | |
| Miscellaneous | | | Available upon purchase: safety valve, Reactor, and EMI filter are optional. | | | | | | |

## 460V Series Specifications HES____43A

| | Model Name | | HES____43A | | | | | | | | | | | |
|---|---|---|---|---|---|---|---|---|---|---|---|---|---|---|
| | | | 063G | 063H | 080G | 080H | 100G | 100H | 100Z | 125G | 125H | 160G | 160H | 200G |
| Oil Pump Capacity | | cc/rev | 25 | | 32 | | 40 | | | 50 | | 64 | | 80 |
| Flow rate Specifications | Flow Rate | L/min | 63 | | 80 | | 100 | | | 125 | | 160 | | 200 |
| | Linearity | % | Below 1% F.S. | | | | | | | | | | | |
| | Magnetic Hysteresis | % | Below 1% F.S. | | | | | | | | | | | |
| Pressure Specifications | Maximum Pressure | Mpa | 14 | 18 | 14 | 18 | 14 | 18 | 18 | 14 | 18 | 14 | 18 | 14 |
| | Minimum Pressure | Mpa | 0.1 | | | | | | | | | | | |
| | Linearity | % | Below 1% F.S. | | | | | | | | | | | |
| | Magnetic Hysteresis | % | Below 1% F.S. | | | | | | | | | | | |
| Servo Motor Specifications | Power | kW | 11 | | | | | | | 15 | | | 20 | |
| | Insulation Class | | UL: Class A | | | | | | | | | | | |
| | Cooling Method | | Fan Cooling | | | | | | | | | | | |
| | Ambient Temperature | | 0 ~ 40 °C | | | | | | | | | | | |
| | Ambient Humidity | | 20 ~ 90 RH(No condensation) | | | | | | | | | | | |
| | Weight | kg | 82 | | | | 83 | | 95 | 108 | | 110 | | 144 |
| Servo Controller Specifications | Model Number VFD-___VL43A(_) | | 110A (06GA) | 150B (06HA) | 150B (08GA) | 185B (08HA) | 185B (10GA) | 220A (10HA) | 220A (10ZA) | 220A (12GA) | 300B (12HA) | 300B (16GA) | 370B (16HA) | 370B (20GA) |
| | Input Voltage | | Three-Phase 380 ~ 460V, 50/60Hz | | | | | | | | | | | |
| | Rated Output Capacity | KVA | 19 | 25 | | 29 | | 34 | | | 46 | | 56 | |
| | Weight | kg | 10 | | | | | 13 | | | | | 36 | |
| | Brake Unit | | Built-in | | | | | | | | | | External VFDB-4045 | |
| | Brake resistor | W | 1000 | | | | | | | | | | 1500 | |
| | | Ω | 25 | | | | | | 20 | | 14 | | 13 | |
| | Speed Detector | | Resolver | | | | | | | | | | | |
| | Pressure Command Input | | 0~10V Support three-point calibration | | | | | | | | | | | |
| | Flow Rate Command Input | | 0~10V Support three-point calibration | | | | | | | | | | | |
| | Multi-functional Input Terminal | | 5ch DC24V 8mA | | | | | | | | | | | |
| | Multi-functional Output Terminal | | 2 ch DC24V 50mA, 1 ch Relay output | | | | | | | | | | | |
| | Analog Output Voltage | | 2 ch dc 0~10V | | | | | | | | | | | |
| | Cooling Method | | Fan Cooling | | | | | | | | | | | |
| | Ambient Temperature | | -10 ~ 45 °C | | | | | | | | | | | |
| | Ambient Humidity | | Below 90 RH(Non condensation) | | | | | | | | | | | |
| | Protection Functions | | Over current, over voltage, low current, overload, or overheating of AC motor drive, overload or overheating of motor, operation speed error | | | | | | | | | | | |
| Actuation Oil | Working Medium | | HL-HLP DIN51 524 Part1/2 R68,R46 | | | | | | | | | | | |
| | Operation Temperature | °C | -20 to 100 | | | | | | | | | | | |
| | Viscosity | @40 °C | 67.83 | | | | | | | | | | | |
| | | @100 °C | 8.62 | | | | | | | | | | | |
| Miscellaneous | | | Available upon purchase: safety valve, Reactor, and EMI filter are optional. | | | | | | | | | | | |

## 460V Series Specifications HES____43C

| Model Name | | | HES___43C | | | | | | | |
|---|---|---|---|---|---|---|---|---|---|---|
| | | | 063H | 080H | 100H | 125H | 160H | 200H | 250M | 320M |
| Oil Pump Capacity | | cc/rev | 25 | 32 | 40 | 50 | 64 | 80 | 125 | 160 |
| Flow rate Specifications | Flow Rate | L/min | 63 | 80 | 100 | 125 | 160 | 200 | 250 | 320 |
| | Linearity | % | Below 1% F.S. | | | | | | | |
| | Magnetic Hysteresis | % | Below 1% F.S. | | | | | | | |
| Pressure Specification | Maximum Pressure | Mpa | 18 | | | | | | | |
| | Minimum Pressure | Mpa | 0.1 | | | | | | | |
| | Linearity | % | Below 1% F.S. | | | | | | | |
| | Magnetic Hysteresis | % | Below 1% F.S. | | | | | | | |
| Servo Motor Specifications | Power | kW | 10 | 10 | 14 | 18 | 23 | 25 | 45 | 52 |
| | Insulation Class | | Class F (Winding H grade) | | | | | | | |
| | Cooling Method | | Fan Cooling | | | | | | | |
| | Ambient Temperature | | 0 ~ 40 ℃ | | | | | | | |
| | Ambient Humidity | | 20 ~ 90 RH( No condensation ) | | | | | | | |
| | Weight | kg | 83 | 83 | 90 | 97 | 105 | 121 | 206 | 224 |
| Servo Controller Specifications | Model name VFD-___ | | 110VL43A 06HC | 150VL43B 08HC | 185VL43B 10HC | 220VL43A 12HC | 300VL43B 16HC | 300VL43B 20HC | 550VL43A 25MC | 550VL43A 32MC |
| | Input Voltage | | Three Phase 380 ~ 480V, 50/60Hz | | | | | | | |
| | Rated Output Capacity | KVA | 19 | 25 | 29 | 34 | 46 | 46 | 80 | 80 |
| | Weight | kg | 10 | 10 | 10 | 13 | 13 | 13 | 50 | 50 |
| | Brake Unit | | Built-in | | | | | | External VFDB-4045 | |
| | Brake resistor | W | 300 | 300 | 1000 | 1000 | 1000 | 1000 | 1500 | 1500 |
| | | Ω | 25 | 25 | 25 | 25 | 14 | 14 | 13 | 13 |
| | Speed Detector | | Resolver | | | | | | | |
| | Pressure Command Input | | 0~10V Support three-point calibration | | | | | | | |
| | Flow Rate Command Input | | 0~10V Support three-point calibration | | | | | | | |
| | Multi-functional Input Terminal | | 5ch DC24V 8mA | | | | | | | |
| | Multi-functional Output Terminal | | 2 ch DC24V 50mA, 1 ch Relay output | | | | | | | |
| | Analog Output Voltage | | 1 ch dc 0~10V | | | | | | | |
| | Cooling Method | | Fan Cooling | | | | | | | |
| | Ambient Temperature | | -10 ~ 45 ℃ | | | | | | | |
| | Ambient Humidity | | Below 90 RH(Non-condensation) | | | | | | | |
| | Protection Functions | | Over current, over voltage, low current, overload, or overheating of AC motor drive, overload or overheating of motor, operation speed error | | | | | | | |
| | Certifications | | CE, UL CERTIFIED SAFETY US-CA E176972 | | | | | | | |
| Actuation Oil | Working Medium | | HL-HLP DIN51 524 Part1/2 R68,R46 | | | | | | | |
| | Operation Temperature | ℃ | -20 to 100 | | | | | | | |
| | Viscosity | @40 °C | 67.83 | | | | | | | |
| | | @100°C | 8.62 | | | | | | | |
| Miscellaneous | | | Available upon purchase: safety valve, Reactor, and EMI filter are optional. | | | | | | | |

## 460V Series HES____43C

| Model Name | | | HES___43C | | | | | |
|---|---|---|---|---|---|---|---|---|
| | | | 063M | 080M | 100M | 125M | 160M | 200M |
| Oil Pump Capacity | | cc/rev | 32 | 40 | 50 | 64 | 80 | 100 |
| Flow rate Specifications | Flow Rate | L/min | 63 | 80 | 100 | 125 | 160 | 200 |
| | Linearity | % | Below 1% F.S. | | | | | |
| | Magnetic Hysteresis | % | Below 1% F.S. | | | | | |
| Pressure Specification | Maximum Pressure | Mpa | 18 | | | | | |
| | Minimum Pressure | Mpa | 0.1 | | | | | |
| | Linearity | % | Below 1% F.S. | | | | | |
| | Magnetic Hysteresis | % | Below 1% F.S. | | | | | |
| Servo Motor Specifications | Power | kW | 10 | 10 | 14 | 18 | 23 | 32 |
| | Insulation Class | | Class F | | | | | |
| | Efficiency Class | | IE3 | | | | | |
| | Certifications | | CE | | | | | |
| | Cooling Method | | Fan Cooling | | | | | |
| | Ambient Temperature | | 0 ~ 40 ℃ | | | | | |
| | Ambient Humidity | | 20 ~ 90 RH (Non-condensation), altitude <1000m | | | | | |
| | Weight | kg | 83 | 83 | 90 | 97 | 105 | 121 |
| Servo Controller Specifications | Model Name VFD-___ | | 150VL43B (06MC) | 185VL43B (08MC) | 220VL43B (10MC) | 300VL43B (12MC) | 300VL43B (16MC) | 370VL43B (20MC) |
| | Input Voltage | | Three-Phase 380 ~ 480V, 50/60Hz | | | | | |
| | Rated Output Power | kW | 15 | 18.5 | 22 | 30 | 30 | 37 |
| | Weight | kg | 10 | | | 13 | | |
| | Bake Unit | | Built-in | | | | | External VFDB-4045 |
| | Brake Resistor | W | 300 | | 1000 | 1000 | | |
| | | Ω | 25 | | 25 | 14 | | |
| | Speed Detector | | Resolver | | | | | |
| | Pressure Command Input | | 0~10V Support three-point calibration | | | | | |
| | Flow Rate Command Input | | 0~10V Support three-point calibration | | | | | |
| | Multi-functional Input Terminal | | 5ch DC24V 8mA | | | | | |
| | Multi-functional Output Terminal | | 2 ch DC24V 50mA, 1 ch Relay output | | | | | |
| | Analog Output Voltage | | 2 ch dc 0~10V | | | | | |
| | Cooling Method | | Fan cooling | | | | | |
| | Ambient Temperature | | -10 ~ 45 ℃ | | | | | |
| | Ambient Humidity | | Below 90 RH (Non-condensation) | | | | | |
| | Protection Functions | | Over current, over voltage, low current, overload, or overheating of AC motor drive, overload or overheating of motor, operation speed error | | | | | |
| Actuation Oil | Working Medium | | HL-HLP DIN51 524 Part1/2 R68,R46 | | | | | |
| | Operation Temperature | ℃ | -20 to 100 | | | | | |
| | Viscosity | @40 ℃ | 67.83 | | | | | |
| | | @100 ℃ | 8.62 | | | | | |
| Miscellaneous | | | Available upon purchase: safety valve, Reactor, and EMI filter are optional. | | | | | |

# 1-3 Introduction of Hybrid Energy System

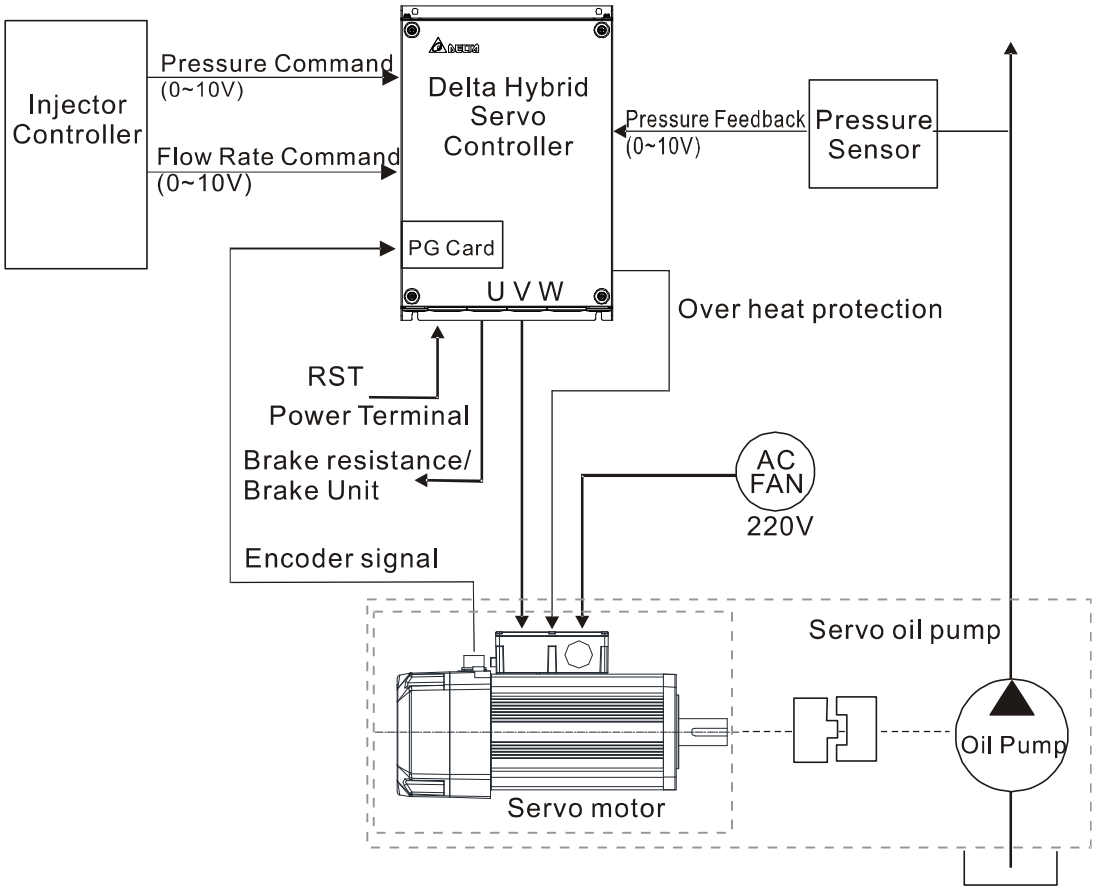

# 1-4 Installation

## Servo Oil Pump

Install the servo oil pump in an environment with the following conditions to ensure safe product operation:

| | | |
|---|---|---|
| Conditions of Operation Environment | Ambient Temperature | 0°C~ 40°C |
| | Relative Humidity | 20%~90%, No condensation |
| | Oil Temperature | 0°C~ 60°C (15°C~ 50°C is recommended) |

The figure below shows that HES version A is installed on the machine. The screws must be secured to the rubber mat to fixate the servo oil pump. It is recommended to add iron bars as the support of the hybrid servo motor.

**HES version A:**

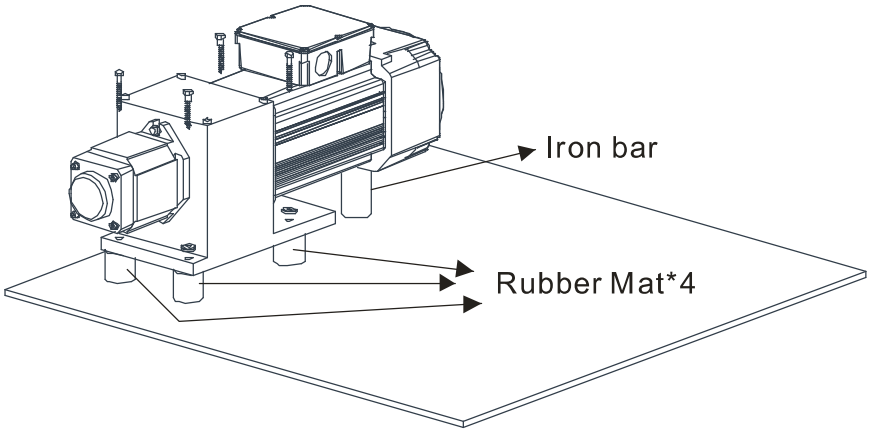


## Installation Space

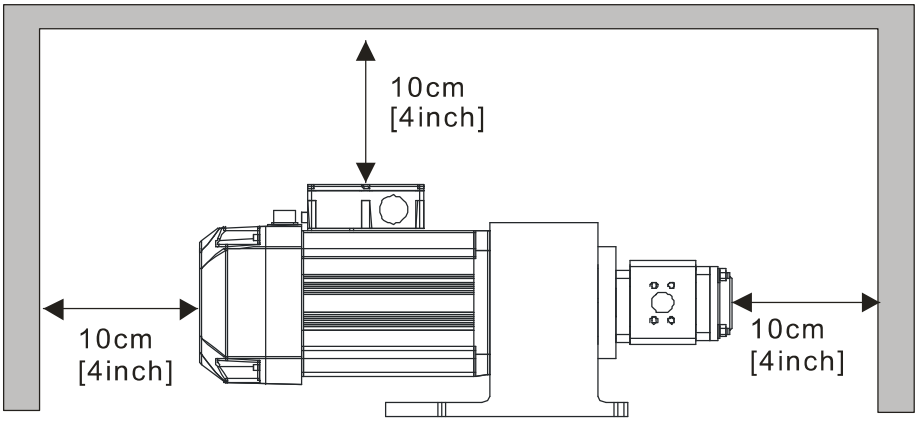


Installation Distance

Since heat is generated as the hybrid servo motor is running, certain space must be reserved to ensure good circulation of the cooling air as shown in the figure above.
When the hybrid servo motor is running, the temperature of the external cover will reach to about 100°C. Do not touch it with hand to avoid burns.

**NOTE**

Do not let any foreign objects such as fiber, paper pieces, wood chips or metal pieces to adhere to the cooling fan of the hybrid servo motor.

**HES version C:**

The figure below shows that HES version C is installed on the machine. Beside absorbing the vibration produced by the running motor, the height and the position of the anti-vibration rubber pads can also be adjusted.

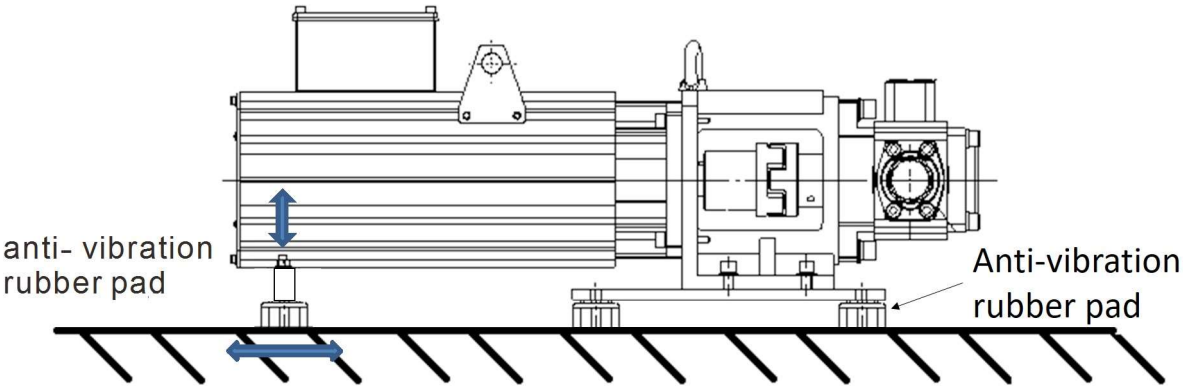


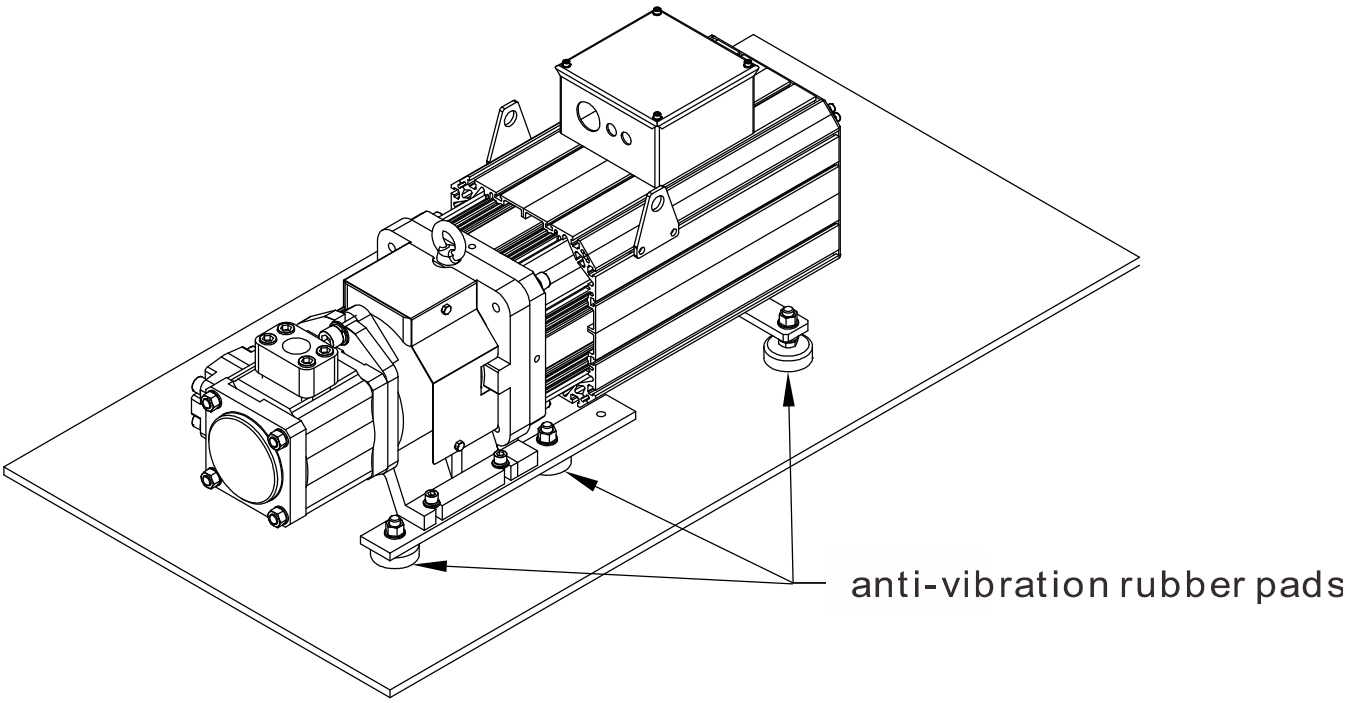


**NOTE**

Do not let any foreign objects such as fiber, paper pieces, wood chips or metal pieces to adhere to the cooling fan of the hybrid servo motor.

Pipelines & Connections

- Remove all protection caps on the pump
- Choose suitable oil tube and connectors (Maximum intake flow rate 1m/s)

| Recommended Specifications of intake oil tube | | |
|---|---|---|
| Flow Rate(L/min) | Tube Diameter (inch) | Length (m) |
| 80 | Above 1.5 | Within 1.5 |
| 100 | Above 1.5 | Within 1.5 |
| 125 | Above 2 | Within 1.5 |
| 160 | Above 2.25 | Within 1.5 |
| 200 | Above 2.5 | Within 1.5 |
| 250 | Above 3.0 | Within 1.5 |
| 320 | Above 3.5 | Within 1.5 |

- Absolute intake oil pressure: Maximum 2 bar
- Prior to assembly, the iron dusts in the connectors and oil tubes must be removed.
- The filter for the oil inlet must be above 150mesh.

**NOTE**

For safety, install safety valve in the oil line loop.

Do not add check valve to the oil outlet of the oil pump to avoid poor response of Hybrid Energy System.

## Hybrid Servo Controller

Install the Hybrid Servo Controller in an environment with the following conditions to ensure safe product operation:

| | | |
|---|---|---|
| Conditions of Operation Environment | Ambient Temperature<br>Relative Humidity<br>Pressure<br>Installation heights<br>Vibration | -10°C~ +45°C<br><90%，No condensation<br>86 ~ 106 kPa<br><1000m<br><20Hz: 9.80 m/s$^2$ (1G) max; 20~50H:5.88 m/s$^2$ (0.6G) max |
| Conditions of Storage and Shipping Environment | Ambient Temperature<br>Relative Humidity<br>Pressure<br>Vibration | -20°C~ +60°C (-4°F ~ 140°F)<br><90%，No condensation<br>86 ~ 106 kPa<br><20Hz: 9.80 m/s$^2$ (1G) max; 20 ~ 50Hz: 5.88 m/s$^2$ (0.6G) max |
| Contamination Protection Grade | 2nd Grade: suitable for factory environments with medium to low contamination | |

## Installation Space

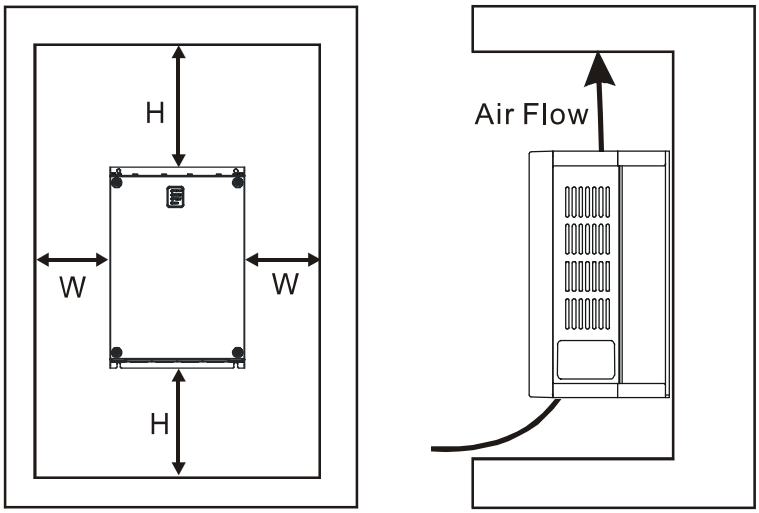


| HP | W<br>mm (inch) | H<br>mm (inch) |
|---|---|---|
| 7.5-20HP | 75 (3) | 175 (7) |
| 25-75HP | 75 (3) | 200 (8) |
| 100HP | 75 (3) | 250 (10) |

- ☑ The Hybrid Servo Controller must be installed vertically with screws to sturdy structures. Do not install it upside down, tilted, or horizontally.
- ☑ Since heat is generated when Hybrid Servo Controller is running, good circulation of the cooling air must be provided as shown in the figure above. Certain space is reserved in the design to allow the heat generated to dissipate upwards. As a result, do not install the machine below any equipment that cannot stand excessive heat. If the machine is installed in the control plate, special care must be given to maintain good air flow for cooling so that the surrounding temperature of Hybrid Servo Controller won't exceed the regulated values. Do not install Hybrid Servo Controller in any closed box with poor air flow and cooling, which will lead to machine malfunction.
- ☑ As the Hybrid Servo Controller is running, the temperature of the cooling plate will change with the ambient temperature and the load, with the maximum temperature reaching to about 90°C. Therefore, the backside of installation materials for Hybrid Servo Controller must be able to sustain high temperature.
- ☑ When multiple Servo Controllers are installed in one single control plate, it is recommended to install them with laterally to avoid heat interference among each other. If stacking installation is needed, spacers must be installed to minimize the effect of the heat from the lower machine on the upper machine.

**NOTE**

Do not let any foreign objects such as fiber, paper pieces, wood chips or metal pieces to adhere to the cooling fan of the hybrid servo motor. The product should be installed in a control plate made of inflammable materials such as metal to avoid the risk of fire.

# Chapter 2 Wiring

2-1 Wiring
2-2 Wiring of Servo Oil Pump
2-3 Descriptions of Main circuit Terminals
2-4 Descriptions of Control Loop Terminals

Upon opening the top cover of the Hybrid Servo Controller and reveal the wiring terminal bus, check if the terminals of each Main circuit and control loop circuit are labeled clearly. Pay attention to the following wiring descriptions to avoid any incorrect connection.

- ☑ The Main circuit power terminals R/L1, S/L2, and T/L3 of the Hybrid Servo Controller are for power input. If the power supply is connected by mistake to other terminals, the Hybrid Servo Controller will be damaged. In addition, it is necessary to verify that the voltage/current rating of power supply is within the numbers listed on the name plate.
- ☑ The ground terminal must be grounded well, which can avoid being stricken by lightning or occurrence of electrocution and minimize interference by noise.
- ☑ The screw between each connection terminal and the wire must be tightened securely to avoid sparking by getting loose from vibration.

| | |
|---|---|
| DANGER | ☑ If the wiring is to be changed, first step is to turn off the power of the Hybrid Servo Controller, for it takes time for the DC filter capacitor in the internal loop to completely discharge. To avoid any danger, the customer can wait for the charging indicator (READY light) to be off completely and measure the voltage with a DC voltmeter. Make sure the measured voltage is below the safety value of $25V_{DC}$ before starting the wiring task. If the user fails to let the Hybrid Servo Controller completely discharge, residual voltage will build up internally, which will cause short circuit and spark if wiring is conducted. Therefore, it is recommended that the user should only conduct the wiring when there is no voltage to ensure his/her safety.<br>☑ The wiring task must be conducted only by professional personnel. Make sure that the power is off before starting to avoid incidence such as electrocution. |
| CAUTION | ☑ During wiring, follow the requirements of the electrical regulations to select proper gauges and conduct wiring accordingly to ensure safety.<br>☑ Check the following items after finishing the wiring:<br>1. Are all connections correct?<br>2. No loose wires?<br>3. No short-circuits between terminals or to ground? |

# 2-1 Wiring

The wiring of the hybrid energy system consists of that for the servo oil pump and that for the Hybrid Servo Controller. The user must follow the wiring loop below for all wire connections.

Standard Wiring Diagram

HES063A23A~HES125G23A; HES063G43A~HES160G43A;

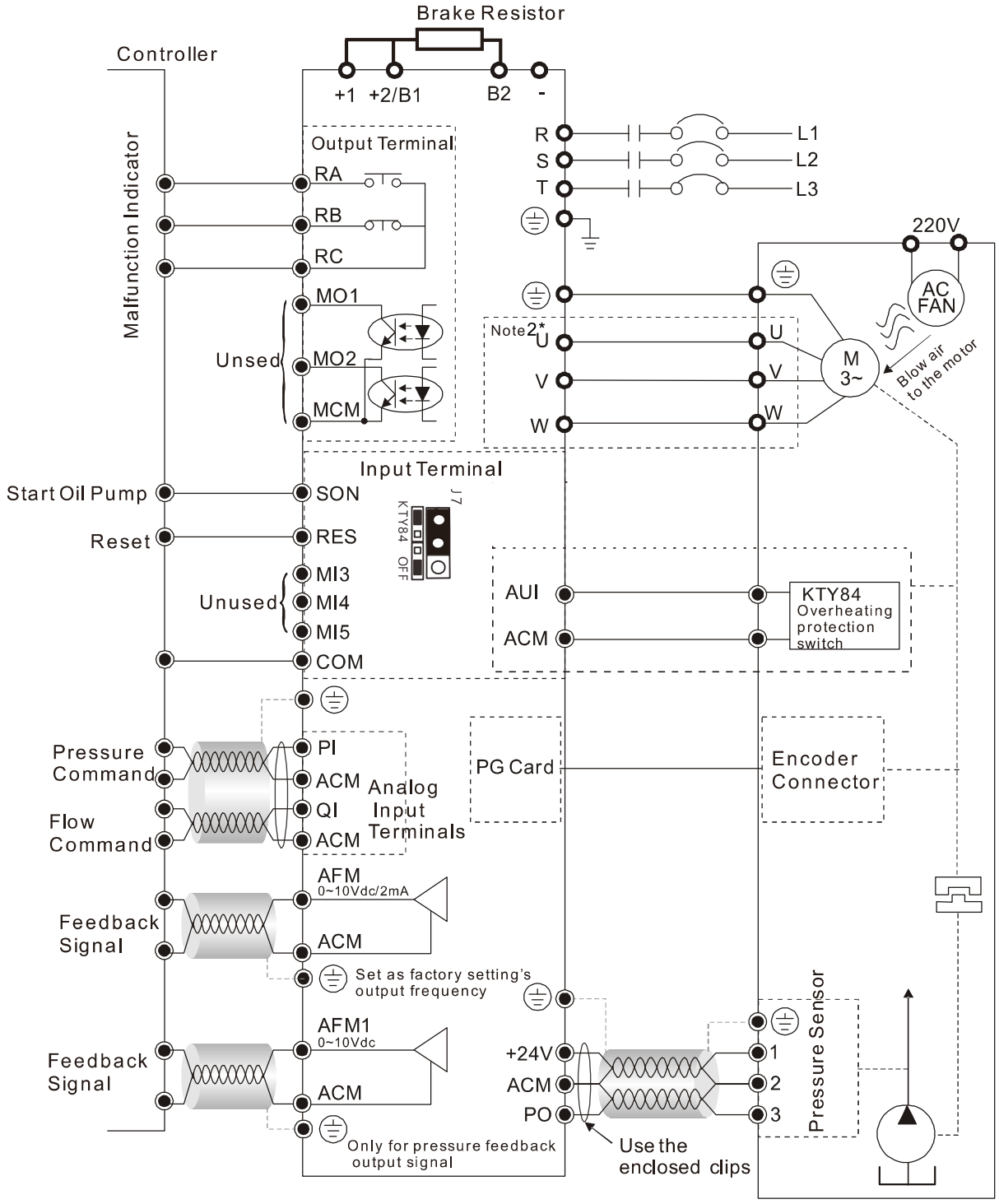

HES125H23A~HES200G23A;

HES160H43A~HES200G43A;

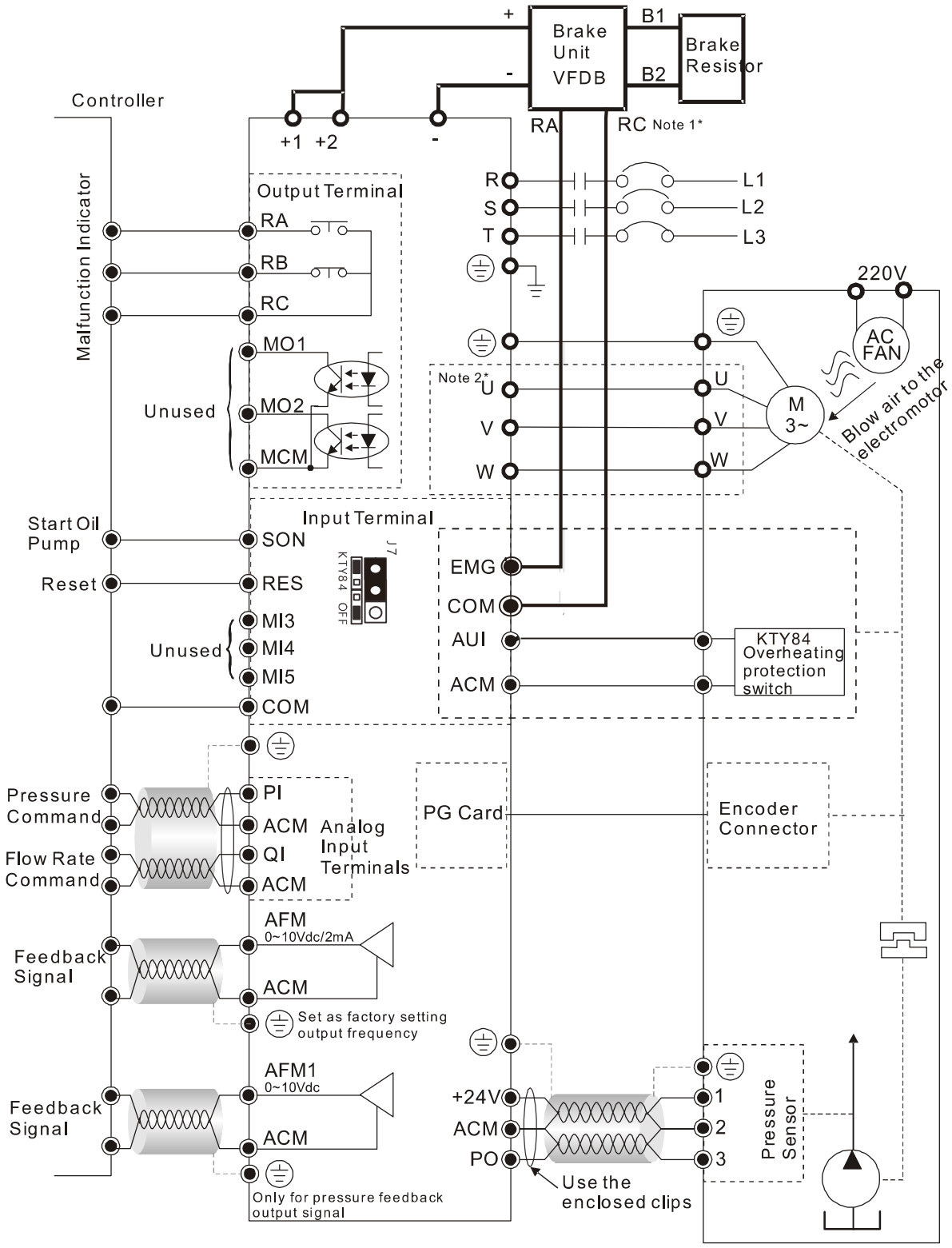

HES063H23C, HES080H23C, HES100H23C, HES125H23C,
HES063H43C, HES080H43C, HES100H43C, HES125H43C, HES160H43C, HES200H43C,
HES063M43C, HES080M43C, HES100M43C, HES125M43C, HES160M43C, HES200M43C

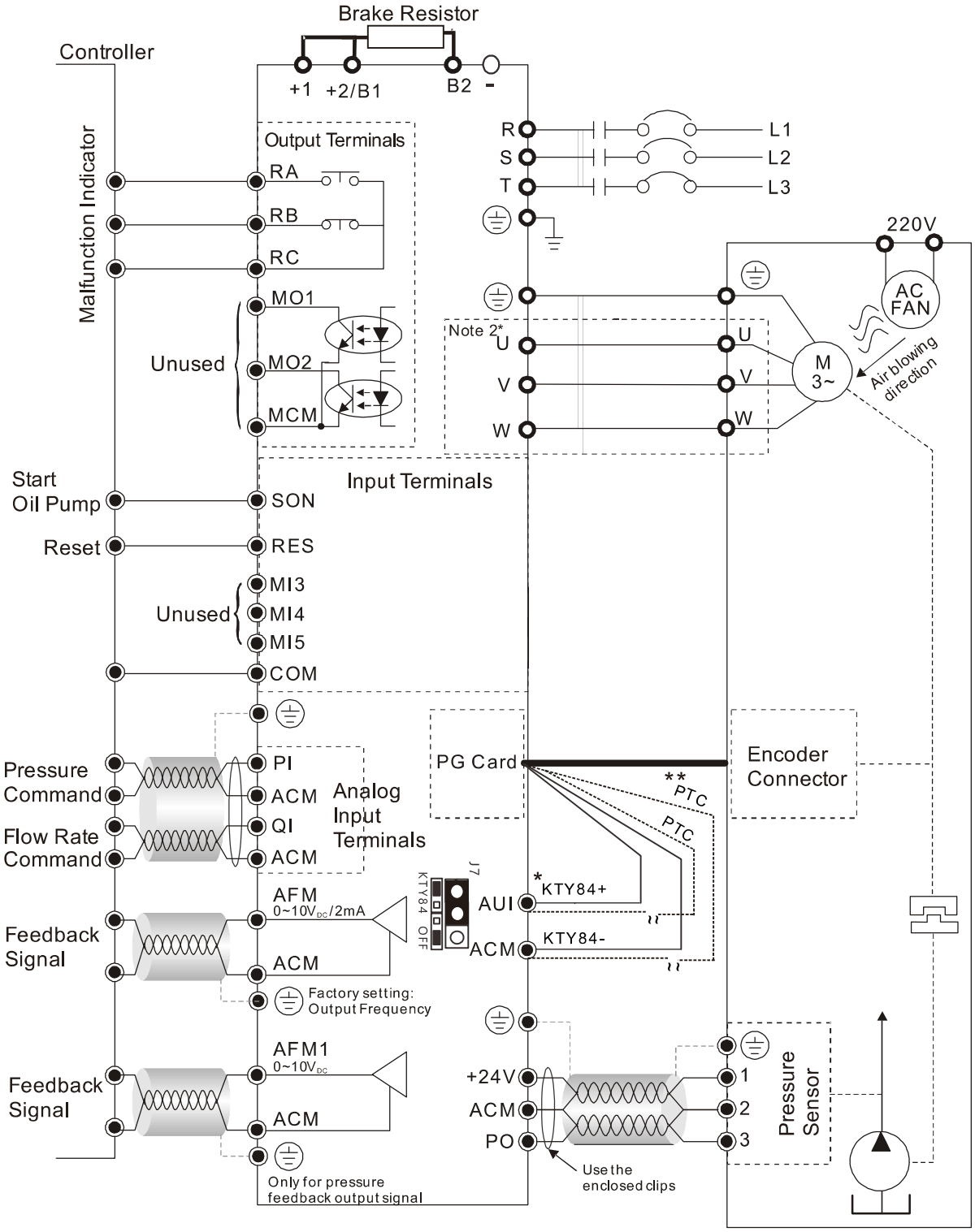

HES160H23C, HES200H23C, HES250G23C,
HES250M43C, HES320M43C

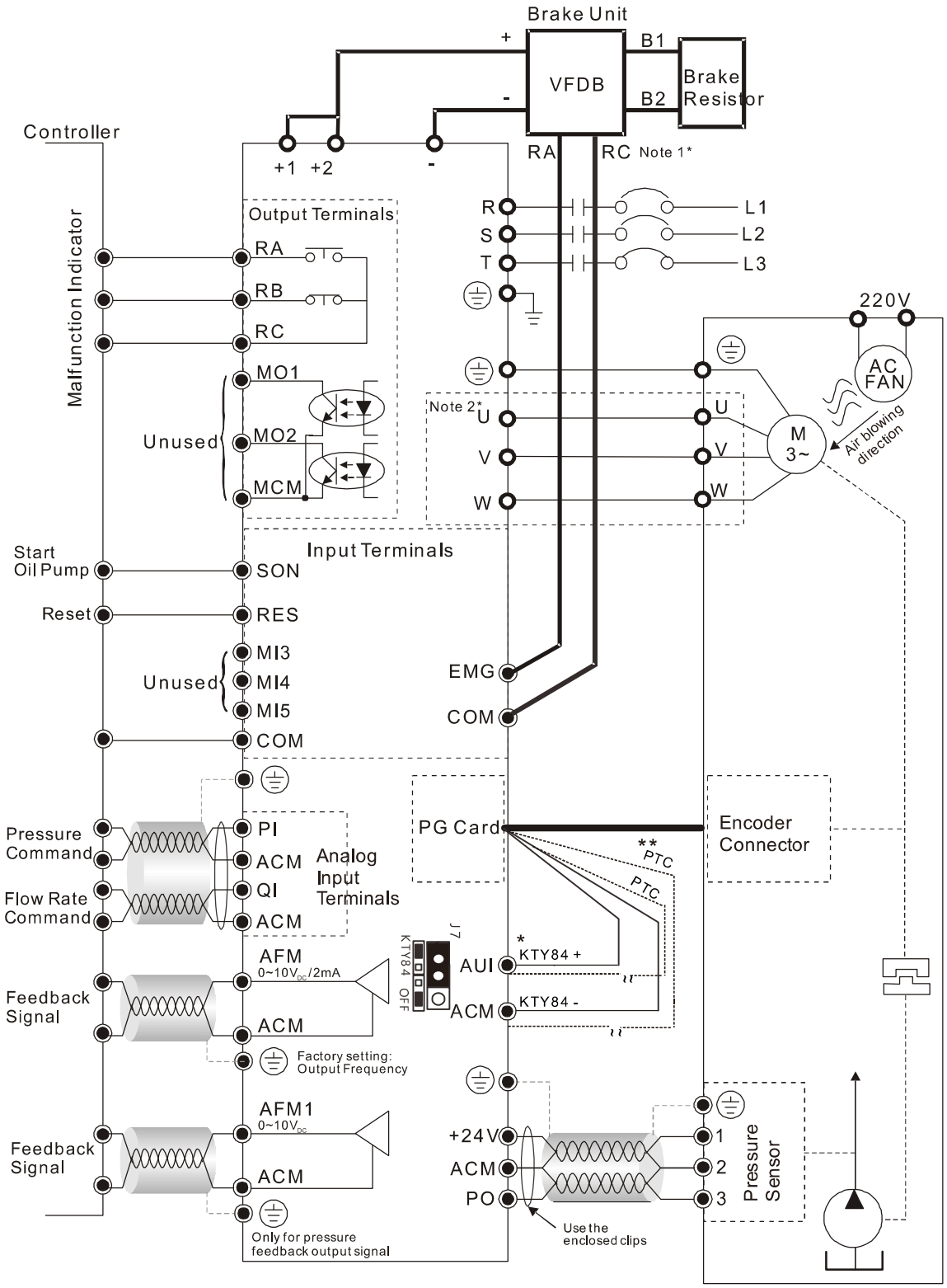


**NOTE**

Old VJ control boards don't have the built-in precision resistor.
VFD-VJ produced before period T1532, W1523 don't have the built-in precision resistor.
To make KTY84 and motor work together, prepare a precision resistor of 2KΩ, 1/4W and have it connected in parallel to the +10V, AUI terminals on the I/O control board.

**Note 1***

The RA, RC wiring of the braking unit: the overheat protection wiring of the braking unit.

**Note 2***

| For models with power rating below 22kW / 460V (including 22kW). (it is recommended to wrap the output wire around the zero-phase reactor for over three times before connecting it to the motor) | For models with power rating above 22kW/460V (included) and all the models of HES 230V.series. |
|---|---|
| 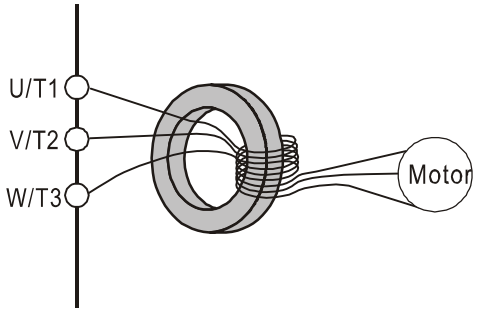  | 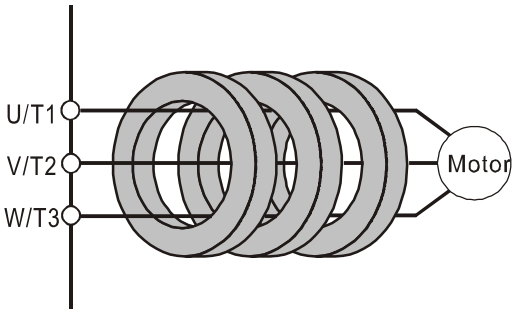  |

Wiring Diagram of Pressure Sensor

Voltage type pressure Sensor => Pin1: 24V， Pin2: ACM， Pin3: PO

| | |
|---|---|
| Connector of Pressure Sensor | 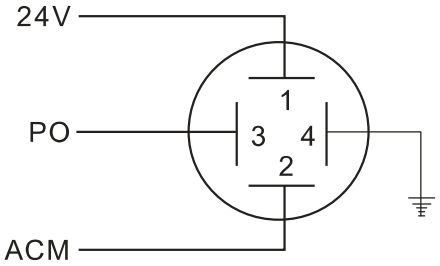  |

Current type pressure Sensor => Pin1: 24V ，Pin2: PO ， Pin3: N/A

| | |
|---|---|
| Connector of Pressure Sensor | 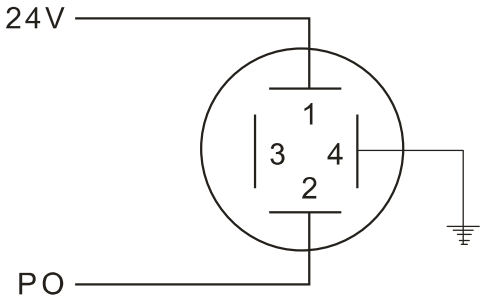  |

Multi-pump Operation Mode

Confluence Mode

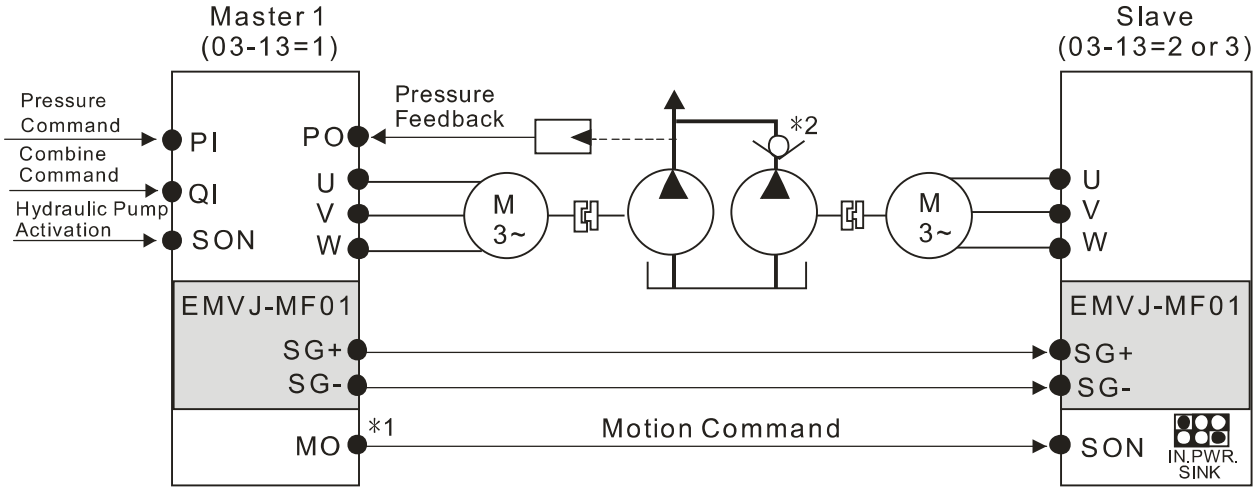


Confluence-Diversion Mode

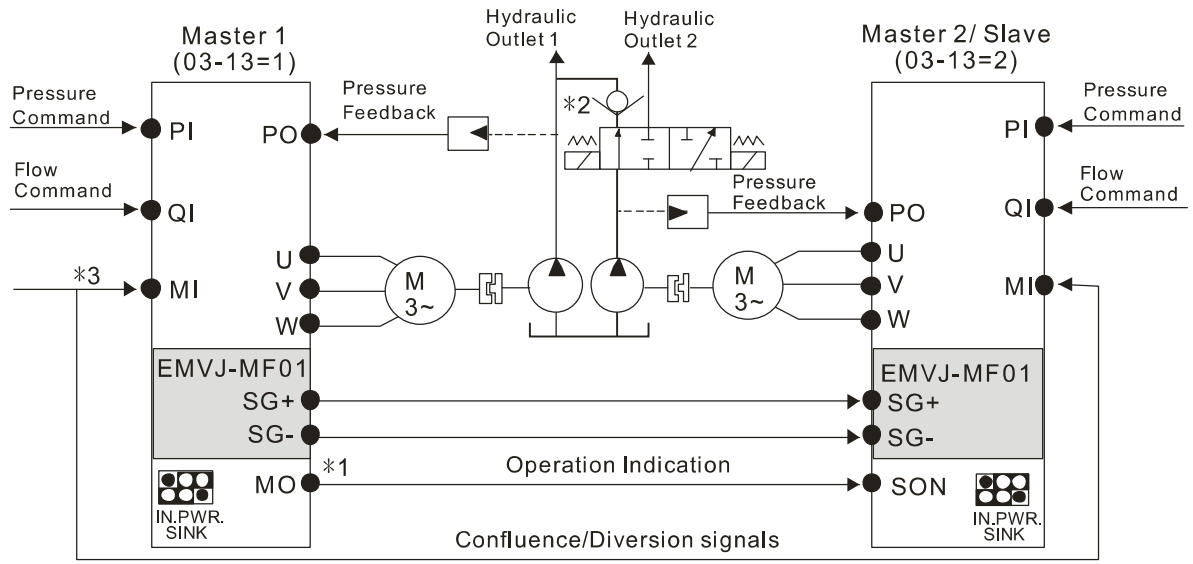


**NOTE**

*1 For firmware version 2.03 and above, the operating commands are given through the communications. Therefore, the parameters for the slave is Pr01-01 = 2

*2 For firmware version 2.03 and above, it is not necessary to install this check valve. By selecting the slave parameter Pr03-21 at the slave to see if the slave will perform the reverse depressurization. Parameters Pr03-21 = 0 for not performing the reverse depressurization.

*3 For firmware version 2.03 and above, the diversion/confluence signal are supplied to only Master 2/Slave. It is not necessary to supply the signal to Master 1.For the following control arrangement, it is necessary to disconnect the communications during diversion.

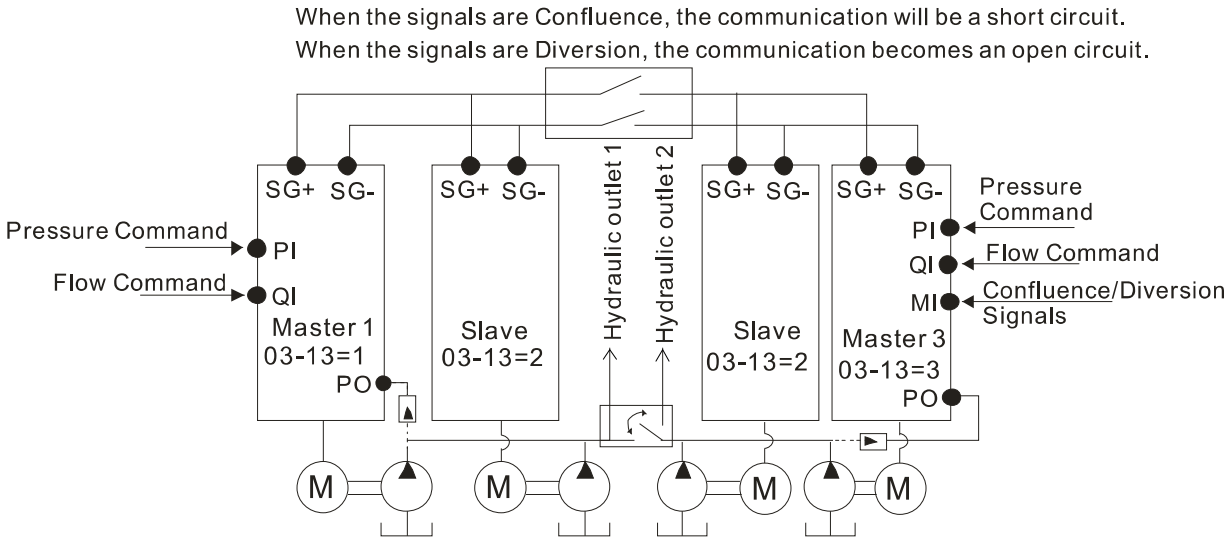
When the signals are Confluence, the communication will be a short circuit.
When the signals are Diversion, the communication becomes an open circuit.
SG+ SG-
SG+ SG-
SG+ SG-
SG+ SG-
Pressure Command
PI
Flow Command
QI
Master 1
03-13=1
PO
Slave
03-13=2
Hydraulic outlet 1
Hydraulic outlet 2
Slave
03-13=2
Master 3
03-13=3
PO
PI
QI
MI
Pressure Command
Flow Command
Confluence/Diversion Signals
M
M
M
M

# 2-2 Wiring of Servo Oil Pump

**HES_____A servo oil pump:**

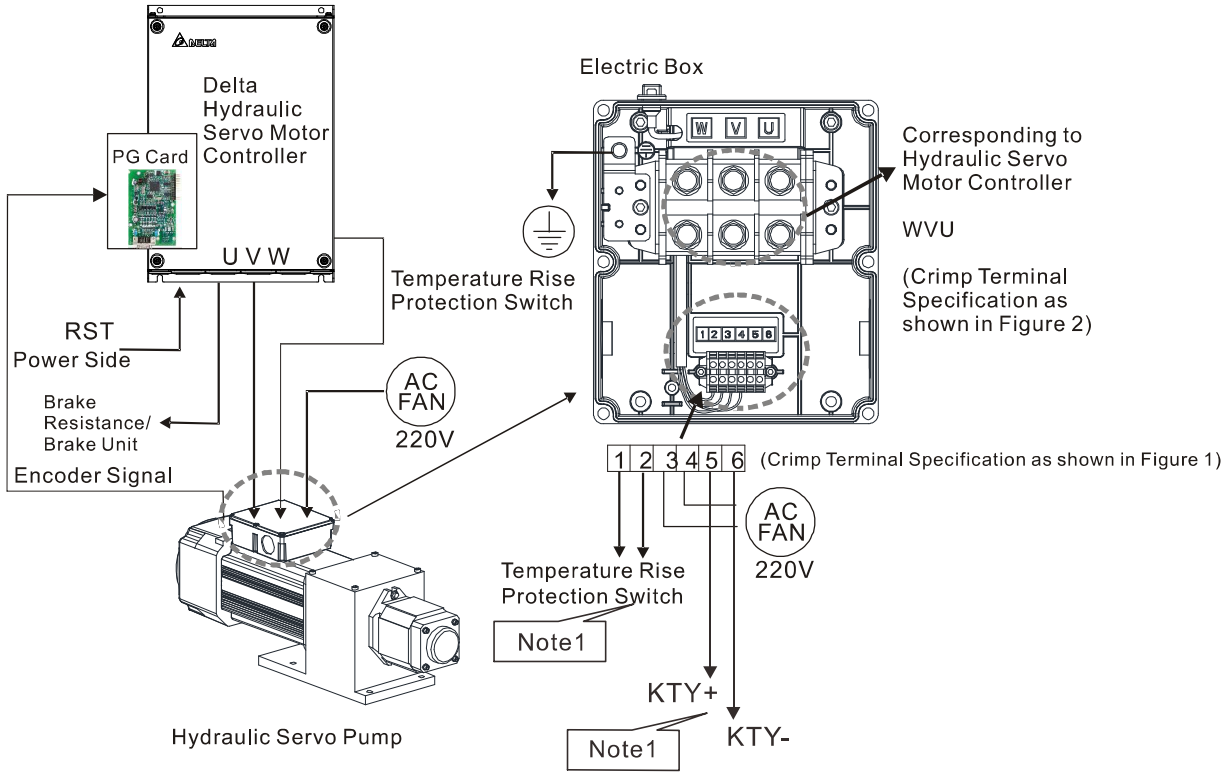


Note 1: After week 06 of year 2016, the temperature rise protection has been modified from On/Off switch (terminal 1 and 2) to KTY84-130 (terminal 5 and 6). Therefore, the wiring method between the temperature rise protection and the hydraulic servo motor is different.

**HES_____C servo oil pump:**

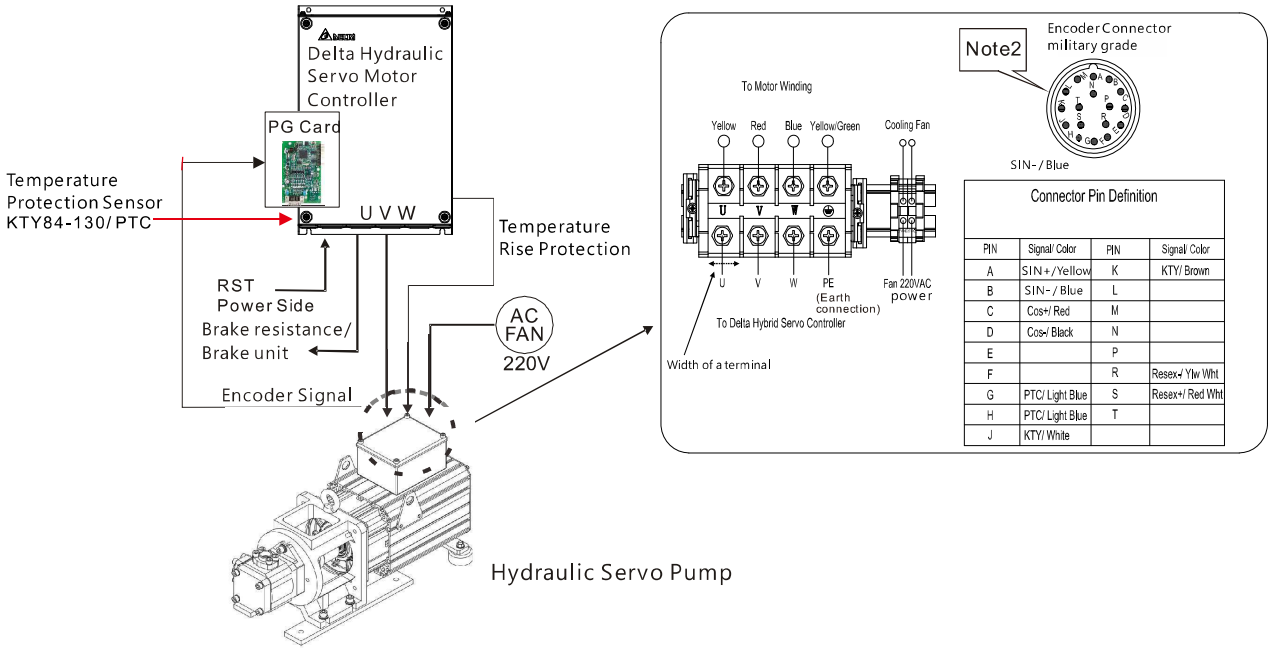


| PIN | Signal/ Color | PIN | Signal/ Color |
|---|---|---|---|
| A | SIN+/Yellow | K | KTY/ Brown |
| B | SIN-/ Blue | L | |
| C | Cos+/ Red | M | |
| D | Cos-/ Black | N | |
| E | | P | |
| F | | R | Resex-/ Ylw Wht |
| G | PTC/ Light Blue | S | Resex+/ Red Wht |
| H | PTC/ Light Blue | T | |
| J | KTY/ White | | |

Encoder CBHE-E5M:

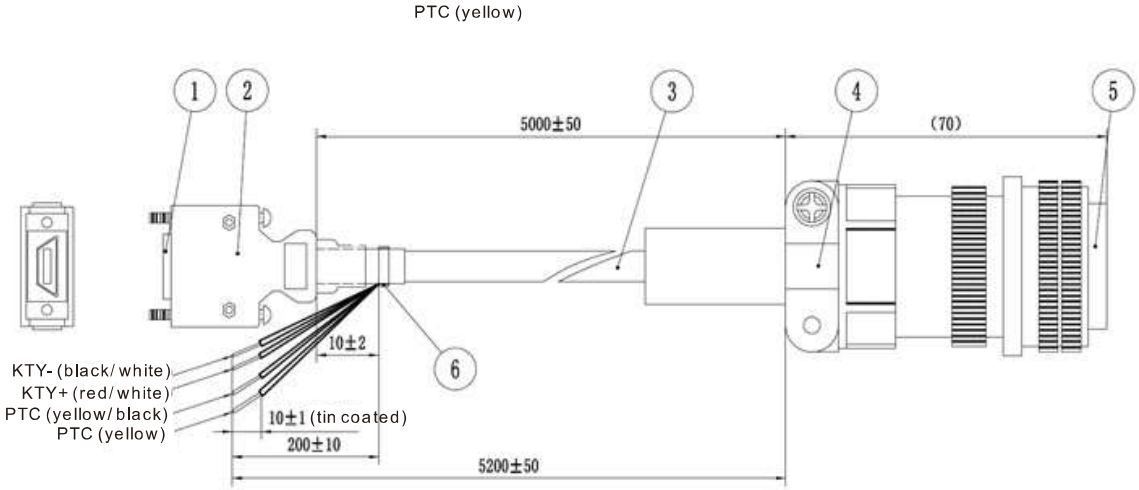


The colors mentioned in the Connector Pin Definition table are only the colors of lines inside the motor. They are not the colors of the lines on the encoder CBHE-E5M

Note 2: The signal of KTY840-130 temperature rising protection is integrated into the encoder.
The production serial numbers after TW1744/ W1744 have PTC temperature rising protection.

### Crimp Terminals

Terminal Torque: 82kg-m (71in-lbf)

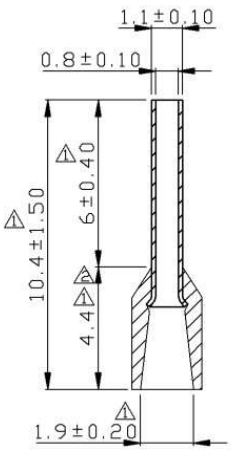


Figure 1

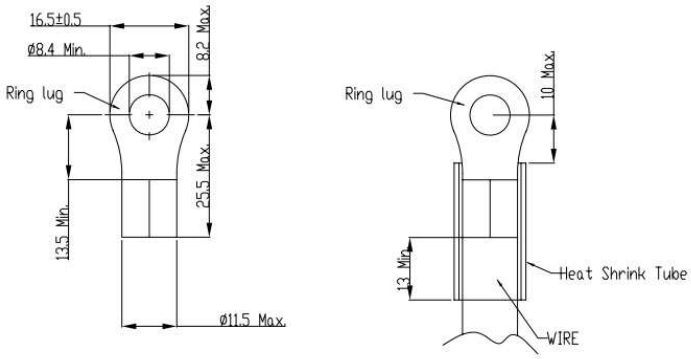


Figure 2

## External Wiring of Hybrid Servo Controller

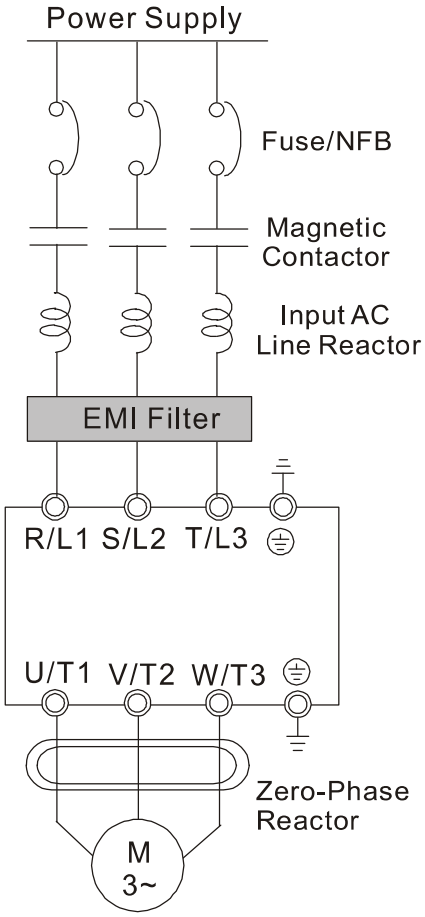


| | |
|---|---|
| Power Supply | Please follow the power rating listed in the user's manual (chapter 1) |
| Fuse/NFB (Optional) | A larger current may be generated when the power is turned on. Please refer to Appendix B-1 to select suitable non-fused switch or fuse. |
| Magnetic Contactor | Turning on/off the side electromagnetic contactor can start/stop the hybrid servo controller. However, frequent switching may lead to malfunction. It is advised not to turn on/off the hybrid servo controller for more than 1 time/hour. |
| Input AC Line Reactor (Optional) | When the output capacity exceeds 1000kVA, it is recommended to add an AC reactor to improve the power factor, with the wiring distance within 10m. Please refer to Appendix B-2 for details. |
| Zero-Phase Reactor | This is to reduce the radiation interference, especially in places with audio devices. It can also reduce the interferences at the input and output sides. Please refer to appendix B-2 for details. The effective range is from AM band to 10MHz. |
| EMI Filter | It can be used to reduce electromagnetic interference. Please refer to Appendix B-5 for details. |

# 2-3 Main Circuit

| Terminal Label | Description |
|---|---|
| R/L1, S/L2, T/L3 | AC line input terminals |
| U/T1, V/T2, W/T3 | Output of Hybrid Servo Controller, connected to hybrid servo motor |
| +1, +2/B1 | For power improvement of the connection terminal of DC reactor. Please remove the shorting plate in installation (DC reactors are built-in in models with power ≥ 37KW) |
| +2/B1, B2 | Connection terminal of brake resistor. Please follow the selection table to purchase suitable ones. |
| ⏚ | Earth connection, please comply with local regulations. |

**CAUTION**

- ☑ The wiring for the Main circuit must be isolated from that for the control loop to avoid malfunction.
- ☑ Please use isolation wires for control wiring as much as possible. Do not expose the section where the isolation mesh is stripped before the terminal.
- ☑ Please use isolation wire or wire tube for power supply wiring and ground the isolation layer or both ends of wire tube.
- ☑ Usually the control wire does not have good insulation. If the insulation is broken for any reason, high voltage may enter the control circuit (control board) and cause circuit damage, equipment accident, and danger to operation personnel.
- ☑ Noise interferences exist between the Hybrid Servo Controller, hybrid servo motor, and their wirings. Check if the pressure sensor and associated equipments for any malfunction to avoid accidents.
- ☑ The output terminals of the Hybrid Servo Controller must be connected to the hybrid servo motor with the correct order of phases.
- ☑ When the wiring between the Hybrid Servo Controller and hybrid servo motor is very long, it may cause tripping of hybrid servo motor from over current due to large high-frequency current generated by the stray capacitance between wires. In addition, when the leakage current increases, the precision of the current value becomes poor. In such case, an AC reactor must be connected to the output side.
- ☑ The ground wire of the Hybrid Servo Controller cannot be shared with other large current load such as electric welding tool. It has to be grounded separately.
- ☑ For your safety and to reduce noise interference, apply Class D grounding method (⏚) on 230V series and apply Class C grounding method (⏚) on 460V series. (with the ground resistance of 10 Ω or less)

| Voltage Series | Grounding Method | Grounding Resistance |
|---|---|---|
| 230V | Class D | 100Ω or less |
| 460V | Class C | 10Ω or less |

☑ To avoid lightning strike and incidence of electrocution, the external metal ground wire for the electrical equipments must be thick and short and connected to the ground terminal of the Hybrid Servo Controller system.

☑ When multiple Hybrid Servo Controllers are installed together, all of them must be directly connected to a common ground terminal. Please refer to the figure below to make sure there is no ground loop.

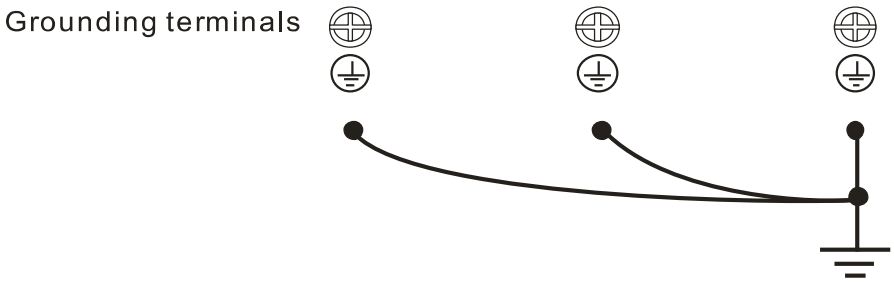


Excellent

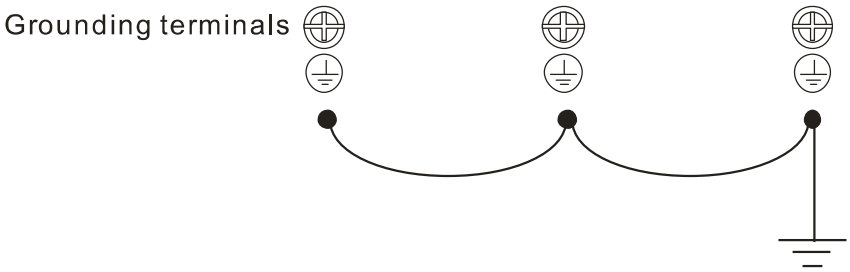


good

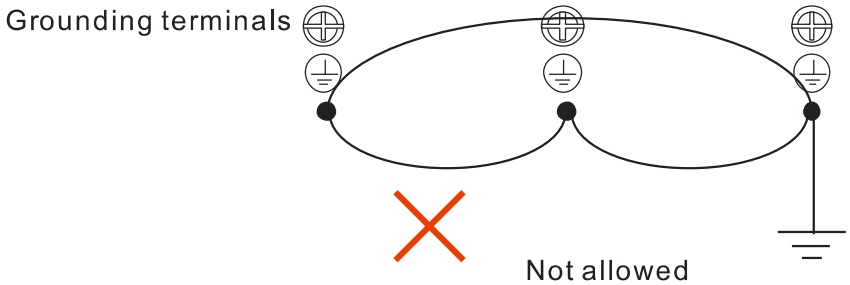


Not allowed

Mains power terminals (R/L1, S/L2, T/L3):

☑ Connect these terminals (R/L1, S/L2, and T/L3) via a non-fuse breaker or earth leakage breaker to 3-phase AC power (some models to 1-phase AC power) for circuit protection. It is unnecessary to consider phase-sequence.

☑ The wire between the three-phase AC input power supply and the Main circuit terminals (R/L1, S/L2, and T/L3) must be connected to a non-fused switch.

☑ Please make sure to fasten the screw of the main circuit terminals to prevent sparks, which is made by the loose screws due to vibration.

☑ Verify the voltage of power supply and the associated maximum available current. Please refer to Chapter 1 Descriptions of Specifications.

☑ If the Hybrid Servo Controller is equipped with a leakage circuit breaker for leakage protection, please select the circuit breaker that has a sensing current above 200mA and action time over 0.1 second to avoid malfunction.

☑ Please use isolation wire or wire tube for power supply wiring and ground the isolation layer or both ends of wire tube.

Output terminals for main circuit (U, V, W) :

☑ The output side of Hybrid Servo Controller cannot be connected with advance phase capacitor, surge absorber, advance phase capacitor, or L-C and R-C filters.

Terminals [+1, +2] for connecting DC reactor, terminals [+1, +2/B1] for connecting brake resistor:

☑ These terminals are used to improve the power factor of DC reactor. There are shorting plates on them when they leave the factory. Remove the shorting plates before connecting the DC reactor.

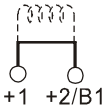


Shorting Plate of DC Reactor

☑ For models with power ≥ 30kW (except VFD300VL43BXXXX), there is no driver loop for brake resistor inside. To increase the brake capability, please use an external brake unit and brake resistor (both are optional).

☑ Never short [B2] or [-] to [＋2/B1], which will damage the Hybrid Servo Controller.

# Main Circuit Terminals

| Model No. | Wiring | tightening torque on the drive's terminal | Crimp Terminal |
|---|---|---|---|
| HES063H23A<br>HES063H23C<br>HES080G23A | 4AWG<br>(21mm²) | 30kgf-cm<br>(26 lbf-in) | 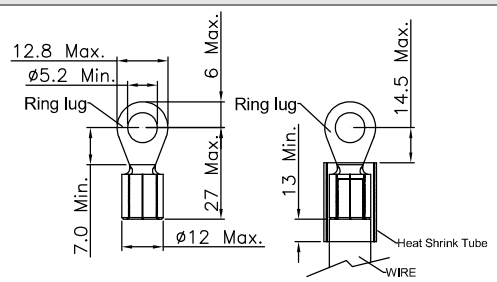 |
| HES080H23A<br>HES080H23C | 4AWG<br>(21mm²) | 50kgf-cm<br>(43.4 lbf-in) | 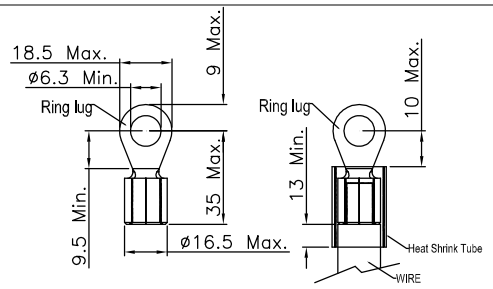 |
| HES100G23A | 4AWG<br>(21mm²) | | |
| HES100H23A<br>HES100H23C | 4AWG<br>(21mm²) | | |
| HES100Z23A | 2AWG<br>(33mm²) | | |
| HES125G23A | 2AWG<br>(33mm²) | | |
| HES125H23A<br>HES125H23C<br>HES160G23A<br>HES160H23A<br>HES160H23C<br>HES200G23A<br>HES200H23C | 2AWG<br>(33mm²) | 200kgf-cm<br>(173 lbf-in) | 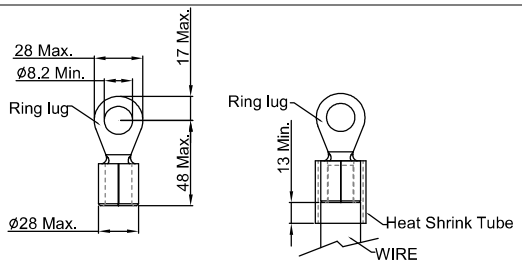 |
| HES063G43A<br>HES063H43A<br>HES063M43C<br>HES080G43A<br>HES080H43A<br>HES080M43C<br>HES100G43A<br>HES063H43C<br>HES080H43C<br>HES100H43C | 8AWG<br>(8mm²) | 30kgf-cm<br>(26 lbf-in) | 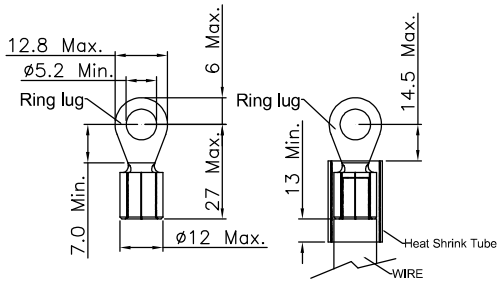 |
| HES100H43A<br>HES100M43C | 8AWG<br>(8mm²) | 50kgf-cm<br>(43.4 lbf-in) | 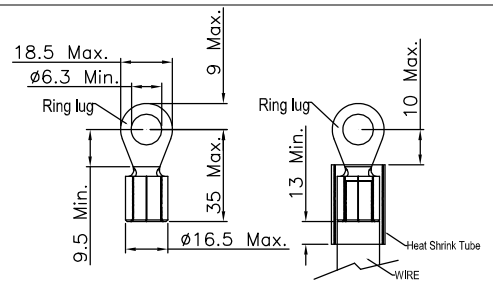 |
| HES100Z43A<br>HES125G43A<br>HES125H43A<br>HES125M43C<br>HES160G43A<br>HES160M43C<br>HES125H43C<br>HES160H43C<br>HES200H43C | 6AWG<br>(13mm²) | | |

| Model No. | Wiring | tightening torque on the drive's terminal | Crimp Terminal |
|---|---|---|---|
| HES160H43A | 4AWG ($21mm^2$) | 80kgf-cm (70 lbf-in) | 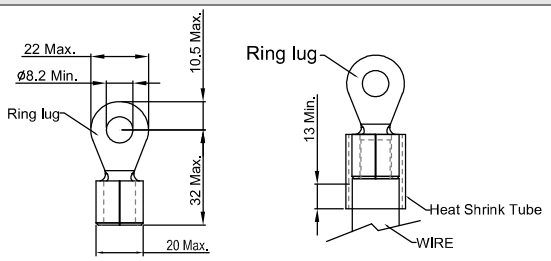 |
| HES200M43C | | | |
| HES200G43A | | | |
| HES250M43C | 2AWG ($33mm^2$) | 200kgf-cm (173 lbf-in) | The motor drives to go with these two HES models have their wires tightened so you don't need to crimp terminals. |
| HES320M43C | | | |

**NOTE**

HES160H23A, HES200G23A installations must use 90ºC wires.

The other model use UL installations must use 600V, 75ºC or 90ºC wire. Use copper wire only.

Contact Delta for more information; if you want to use higher class of overheat protection material.

# 2-4 Control Terminals

Description of SINK（NPN）/SOURCE（PNP）Mode Switching Terminal

① Sink mode
With internal power (+24Vdc)

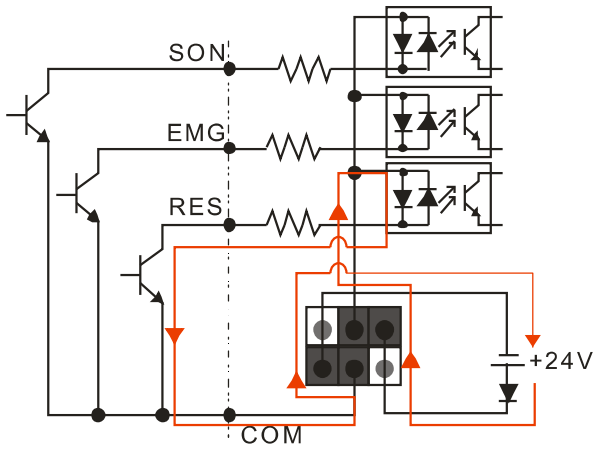


② Source mode
With internal power(+24Vdc)

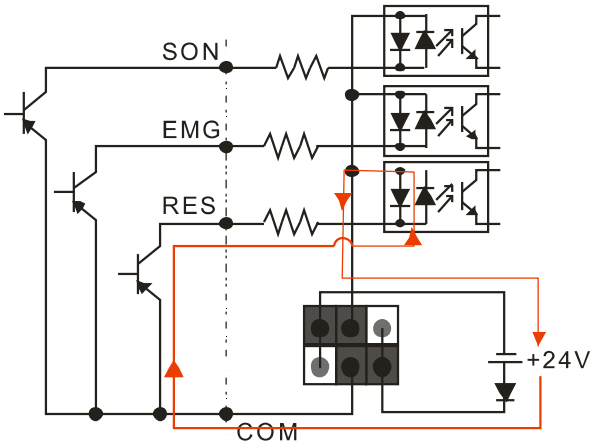


③ Sink mode
With external power (+24Vdc)

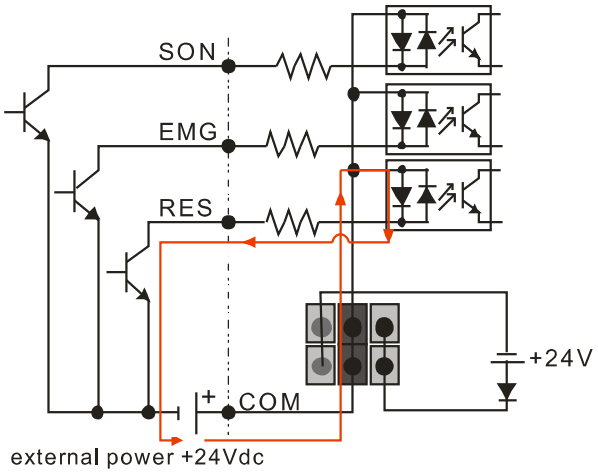


④ Source mode
With external power (+24Vdc)

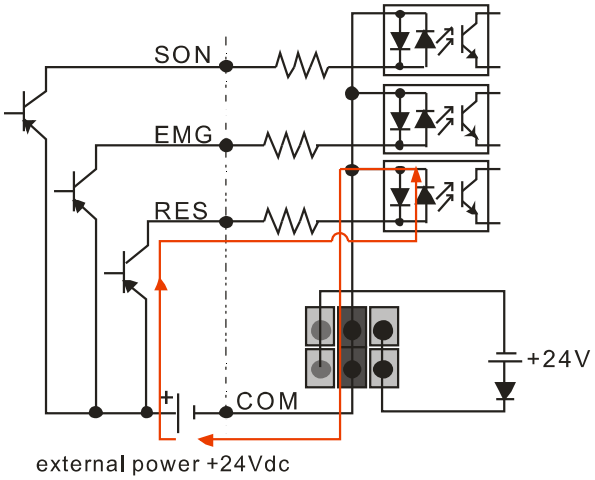


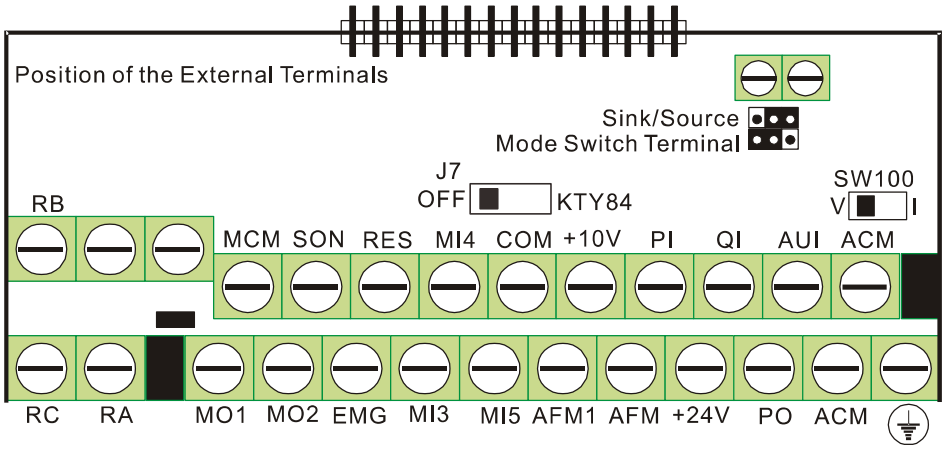

| Frame | Torque | | Wire Gauge |
|---|---|---|---|
| C, D, E | 8 kgf-com (6.9 in-lbf) | | 22-14 AWG (0.3-2.1mm$^2$) |
| | Terminal: 0V/24V | 1.6 kgf-com(1.4 in-lbf) | 30-16 AWG (0.051-1.3mm$^2$) |

| Terminal | Function | Factory Setting (NPN mode) |
|---|---|---|
| SON | Run-Stop | Between terminals SON-DCM: conducting (ON)；run: open circuit (OFF), Stop |
| EMG | Abnormal input from outside | Abnormal input from outside |
| RES | Reset | reset |
| MI3 | Multiple Function Input: Option 3 | No function is set for default setting<br>When conducting (ON), input voltage is 24V$_{DC}$ (Max:30V$_{DC}$) and output impedance is 3.75kΩ；In open circuit (OFF), the allowable leakage current is 10μA |
| MI4 | Multiple Function Input: Option 4 | |
| MI5 | Multiple Function Input: Option 5 | |
| COM | Common terminal of digital control signals (Sink) | Common terminal of multiple function input terminals |
| +E24V | Common terminal of digital control signals (Source) | +24V 80mA |
| DCM | Common terminal of digital control signals (Sink) | Common terminal of multiple function input terminals |
| RA | Malfunctioning abnormal connection 1 (Relay always open a) | Resistive Load:<br>5A(N.O.)/3A(N.C.) 240V$_{AC}$<br>5A(N.O.)/3A(N.C.) 24V$_{DC}$<br>Inductive Load:<br>1.5A(N.O.)/0.5A(N.C.) 240V$_{AC}$<br>1.5A(N.O.)/0.5A(N.C.) 24V$_{DC}$ |
| RB | Malfunctioning abnormal connection 1 (Relay always closed b) | |
| RC | Multi-function Relay Common | |
| MO1 | Multi-function Output 1 (Photocoupler) | Hybrid Servo Controller outputs various types of monitoring signals with the transistor operating in open collector mode.<br>Max: 48Vdc/50mA<br>MO1 ~ MO2<br>Internal circuit<br>MCM |
| MO2 | Multi-function Output 2 (Photocoupler) | |
| MCM | Multi-function Output Common (Photocoupler) | Max. 48V$_{DC}$ 50mA |
| PO | PO/PI/QI circuit<br>PO/PI/QI<br>PO/PI/QI Circuit<br>ACM<br>Internal Circuit | Pressure Feedback<br>Impedance:200kΩ<br>Resolution:12 bits<br>Range:0 ~ 10V or 4~20mA=<br>0~maximum Pressure Feedback value (Pr.00-08)<br>To input current, firmware v2.04 or above and a new I/O control board (the one has SW100 switch) are required.<br>See parameter 03-12 for more information. |
| PI | | Pressure Command<br>Impedance:200kΩ<br>Resolution:12 bits<br>Range:0 ~ 10V=<br>0~maximum pressure command value (Pr.00-07) |

| Terminal | Function | Factory Setting (NPN mode) |
|---|---|---|
| QI | | Flow Rate Command<br>Impedance:200kΩ<br>Resolution:12 bits<br>Range:0 ~ 10V=0~maxium flow rate |
| +10V | Configuration Voltage | Power supply for analog configuration +10$V_{DC}$ 20mA (variable resistor 3~5kΩ) |
| +24V | Power supply terminal of pressure sensor | Configuration power supply for pressure sensor +24$V_{DC}$ 100mA |
| AUI | Analog Voltage<br> 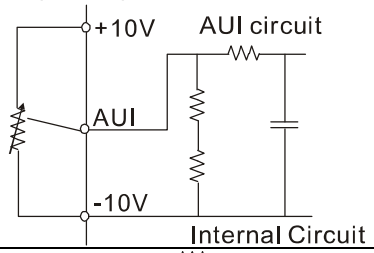 <br> | Impedance:11.3kΩ<br>Resolution:12 bits<br>Range:-10~+10$V_{DC}$ |
| AFM | 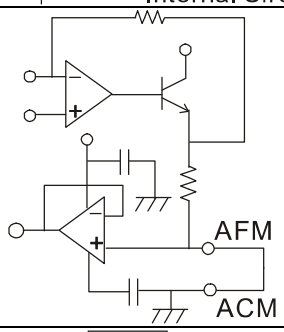 <br> | Impedance:16.9kΩ (voltage output)<br>Output Current: 2mA max<br>Resolution: 0~10V corresponds to maximum operation frequency<br>Range: 0~10V<br>Function Setting: Pr.00-05 |
| AFM1 | 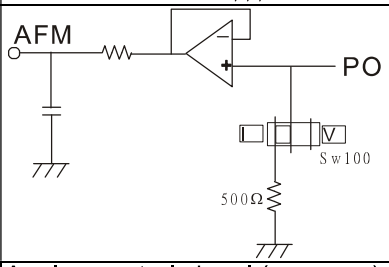 <br> | Output Current: 2mA max<br>Resolution: 0~10V corresponds to maximum operation Pressure<br>Range: 0~10V<br>Function Setting: None<br>Output: Pressure feedback signal only |
| ACM | Analog control signal (common) | Common for ACI, AUI1, AUI2 |

*Control signal wiring size: 18 AWG (0.75 $mm^2$) with shielded wire.

## Analog Input Terminals (PO, PI, QI, AUI, ACM)

☑ The maximum input voltage of PI, PO, and QI cannot exceed +12V and no more than +/-12V for AUI. Otherwise, the analog input function may become ineffective.

☑ Analog input signals are easily affected by external noise. Use shielded wiring and keep it as short as possible (<20m) with proper grounding. If the noise is inductive, connecting the shield to terminal ACM can bring improvement.

☑ The interference generated by the Hybrid Servo Controller can cause the pressure sensor to malfunction. IN this case, a capacitor and a ferrite core can be connected to the pressure sensor side, as shown in the figure below:

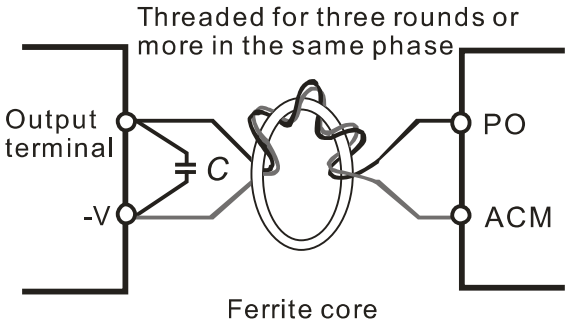


## Transistor outputs (MO1, MO2, MCM)

☑ Make sure to connect the digital outputs to the right polarity.

☑ When connecting a relay to the digital outputs connect a surge absorber across the coil and check the polarity.

# Chapter 3 Start Up

3-1 Description of Control Panel
3-2 Adjustment Flow Chart
3-3 Explanations for the Adjustment Steps

| | |
|---|---|
| **CAUTION** | ☑ Please verify again before operation that the wiring is done correctly, especially that the output terminals U/T1, V/T2, and W/T3 of the Hybrid Servo Controller cannot have any power input. Make sure that the ground terminal ⏚ is connected correctly.<br>☑ Do NOT operate the AC motor drive with humid hands.<br>☑ Check for loose terminals, connectors or screws.<br>☑ Make sure that the front cover is well installed before applying power. |
| **WARNING** | ☑ In case of abnormal operation of the Hybrid Servo Controller and the associated servo motor, stop the operation immediately and refer to “Troubleshooting” to check the causes of anomalies. After the output of the Hybrid Servo Controller is stopped, when the power terminals L1/R, L2/S, and L3/T of the main circuit are still connected, touching the output terminals U/T1, V/T2, and W/T3 of the Hybrid Servo Controller may lead to electric shock. |

# 3-1 Description of Control Panel

## Description of the Digital Keypad KPVJ-LE01

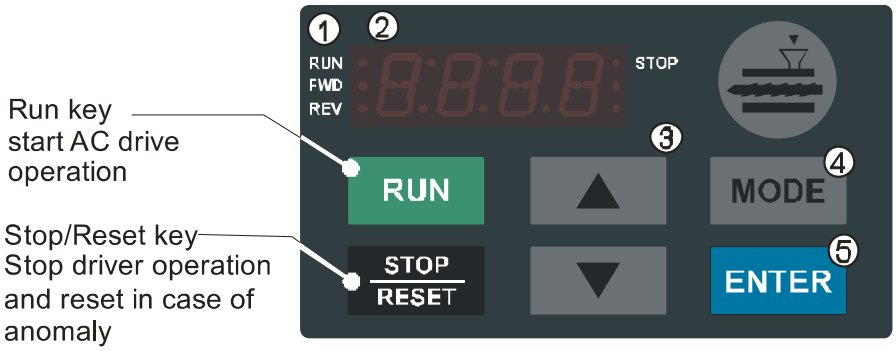


❶ Status Display
Display the driver's current status.

❷ LED Display
Indicates frequency, voltage, current, user defined units and etc.

❸ UP and DOWN Key
Set the parameter number and changes the numerical data, such as Master Frequenc

❹ MODE
Change between different display mode.

❺ ENTER
Used to enter/modify programming parameters.

## Descriptions of Function Display Items

| Display **Message** | Descriptions |
|---|---|
| RUN FWD REV F60.0 STOP | Displays the AC driver Master frequency |
| RUN FWD REV H50.0 STOP | Displays the actual output frequency at terminals U/T1, V/T2, and W/T3. |
| RUN FWD REV U180 STOP | User defined unit (where U = F x Pr.00.04) |
| RUN FWD REV A 5.0 STOP | Displays the output current at terminals U/T1, V/T2, and W/T3. |
| RUN FWD REV Frd STOP | Displays the AC motor drive forward run status. |
| RUN FWD REV rEv STOP | Displays the AC motor drive reverse run status. |
| RUN FWD REV 01.00 STOP | Displays the parameter item |
| RUN FWD REV 10 STOP | Displays the actual stored value of the selected parameter. |

| Display **Message** | Descriptions |
|---|---|
| RUN FWD REV EF STOP | External Fault. |
| RUN FWD REV End STOP | Display “End” for approximately 1 second if input has been accepted by pressing ENTER key. After a parameter value has been set, the new value is automatically stored in memory. To modify an entry, use the ▲ and ▼ keys. |
| RUN FWD REV Err STOP | Display “Err”, if the input is invalid. |

# Reference Table for the 7-segment LED Display of the Digital Keypad

| Numeric | 0 | 1 | 2 | 3 | 4 | 5 | 6 | 7 | 8 | 9 |
|---|---|---|---|---|---|---|---|---|---|---|
| Seven-segment Display | 0 | 1 | 2 | 3 | 4 | 5 | 6 | 7 | 8 | 9 |
| English Letter | A | a | B | b | C | c | D | d | E | e |
| Seven-segment Display | A | - | - | b | C | c | - | d | E | - |
| English Letter | F | f | G | g | H | h | I | i | J | j |
| Seven-segment Display | F | - | G | - | H | h | - | i | J | j |
| English Letter | K | k | L | l | M | m | N | n | O | o |
| Seven-segment Display | K | - | L | - | - | - | - | n | - | o |
| English Letter | P | p | Q | q | R | r | S | s | T | t |
| Seven-segment Display | P | - | - | q | - | r | S | - | - | t |
| English Letter | U | u | V | v | W | w | X | x | Y | y |
| Seven-segment Display | U | u | - | v | - | - | - | - | Y | - |
| English Letter | Z | z | | | | | | | | |
| Seven-segment Display | Z | - | | | | | | | | |

# 3-2 Adjustment Flow Chart

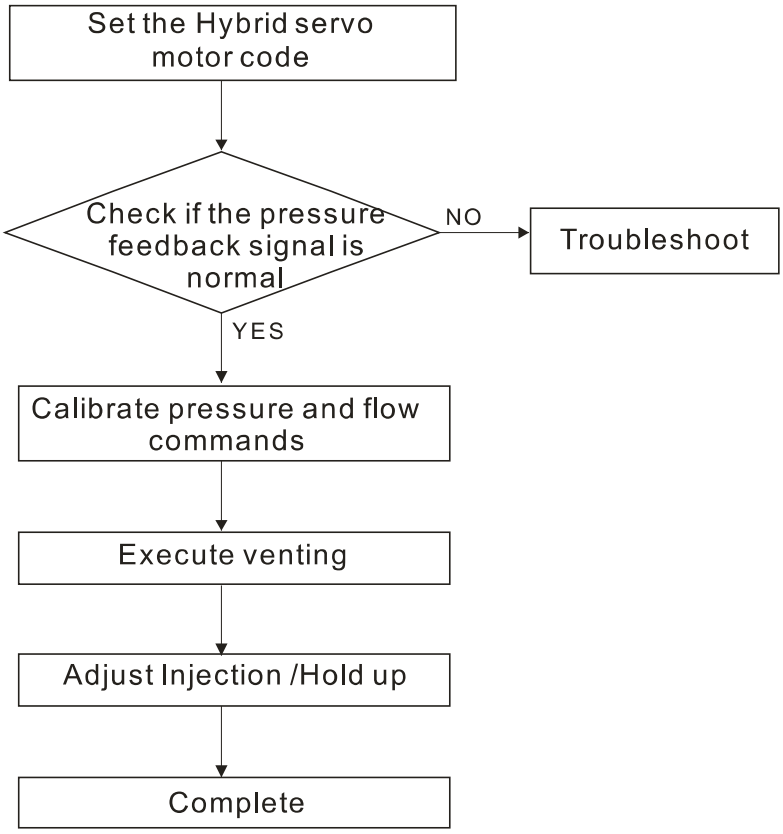


*The firmware version is 2.04 and above, just proceed the process to set up HES ID code.

*The firmware version is 2.05 and above, starts from “Execute venting”.

# 3-3 Explanations for the Adjustment Steps

Operate the following steps with the digital operator (KPVJ-LE01/ KPV-CE01)

Prior to starting running, please verify again if the wiring is correct, especially that the output terminals U/T1, V/T2, and W/T3 of the Hybrid Servo Controller must correspond to the U, V, and W terminals of the Hybrid servo motor, respectively.

**Step 1. Parameter Entry of Hybrid Servo Motor**

- Do not connect the external terminals SON-COM and EMG-COM for the time being.
- Restore the factory default values by setting the Parameter 00-02 = 10

  Parameter reset

| | |
|---|---|
| Pr. 00-02 | 10: Parameter reset |

- Please make sure if the command source has been restored to the factory default (operation by external terminals)

  When KPVJ-LE01/KPV-CE01 is used, set Pr. 01-01=0

  Source of Run Command

| | |
|---|---|
| Pr. 01-01 | 0: Operated by digital operator |
| | 1: Operated by external terminals, Stop on keypad is disabled |
| | 2: Communication port RS-485 is activated and Stop on keypad is disabled |

- Set Pr. 01-35 of the Hybrid servo motor

| | Delta Hybrid Servo Motor ID | |
|---|---|---|
| 0 | Disabled | |
| 16 | ECMA-ER181BP3 | 11kW, 220V motor |
| 17 | ECMA-KR181BP3 | 11kW, 380V motor |
| 18 | ECMA-ER221FPS | 15kW, 220V motor |
| 19 | ECMA-KR221FPS | 15kW, 380V motor |
| 20 | ECMA-ER222APS | 20kW, 220V motor |
| 21 | ECMA-KR222APS | 20kW,380V motor |
| 125 | MSJ-KR133AE48B | 30kW, 380V motor |
| 215 | MSJ-IR2070E42C | 7kW, 380V motor |
| 216 | MSJ-DR201AE42C | 10.4kW, 220V motor |
| 217 | MSJ-IR201AE42C | 10.3kW, 380V motor |
| 218 | MSJ-DR201EE43C | 14.6kW, 380V motor |
| 219 | MSJ-IR201EE42C | 14.2kW, 380V motor |
| 220 | MSJ-DR201IE42C | 18.4kW, 220V motor |
| 221 | MSJ-IR201IE42C | 18.3kW, 380V motor |
| 222 | MSJ-GR202DE42C | 23.1kW, 220V motor |
| 223 | MSJ-OR202DE42C | 23kW380V motor |
| 224 | MSJ-DR202HE42C | 27.6kW, 220V motor |
| 225 | MSJ-LR202FE42C | 25kW, 380V motor |
| 227 | MSJ-IR203CE42C | 32kW, 380V motor |
| 229 | MSJ-OR264FE48C | 45.2kW, 380V motor |
| 231 | MSJ-IR265CE48C | 52.5kW, 380V motor |
| 233 | MSJ-IR266IE48 | 68kW, 380V motor |

| | | |
|---|---|---|
| 245 | MSJ-IR202HE42 | 27kW, 380V motor |

* For firmware version 2.04 and above

## Step 2. Entry HES ID code*

- Do not connect the external terminals SON-COM and EMG-COM for the time being.
- Restore the factory default values by setting the Parameter 00-02 = 10

  Parameter reset

| | |
|---|---|
| Pr. 00-02 | **10: Parameter reset** |

- Please make sure if the command source has been restored to the factory default (operation by external terminals)
  When you use KPVJ-LE01/KPV-CE01, set Pr. 01-01=0.
  When you use VFD-Explorer, set Pr01-01=2.

  Source of Run Command

| | |
|---|---|
| Pr. 01-01 | 0: Operated by digital operator |
| | 1: Operated by external terminals, Stop on keypad is disabled |
| | 2: Communication port RS-485 is activated and Stop on keypad is disabled |

  Source of Run Command

| | |
|---|---|
| Pr. 01-01 | 0: Operated by digital operator |
| | 1: Operated by external terminals, Stop on keypad is disabled |
| | 2: Communication port RS-485 is activated and Stop on keypad is disabled |

- Set Pr. 01-37 of HES ID#

| Model | HES ID# |
|---|---|
| - | - |
| - | - |
| HES063H23C | 2122 |
| HES080H23C | 3122 |
| HES100H23C | 4122 |
| HES125H23C | 5122 |
| HES160H23C | 6122 |
| HES200H23C | 7122 |
| HES250G23C | 8022 |
| HES063H23A | 2120 |
| HES080G23A | 3020 |
| HES080H23A | 3120 |
| HES100G23A | 4020 |
| HES100H23A | 4120 |
| HES100Z23A | 4220 |
| HES125G23A | 5020 |
| HES125H23A | 5120 |
| HES160G23A | 6020 |
| HES160H23A | 6120 |
| HES200G23A | 7020 |

| Model | HES ID# |
|---|---|
| - | - |
| HES063G43A | 2040 |
| HES063H43A | 2140 |
| HES080G43A | 3040 |
| HES080H43A | 3140 |
| HES100G43A | 4040 |
| HES100H43A | 4140 |
| HES100Z43A | 4240 |
| HES125G43A | 5040 |
| HES125H43A | 5140 |
| HES160G43A | 6040 |
| HES160H43A | 6140 |
| HES200G43A | 7040 |

| Model | HES ID# |
|---|---|
| HES063H43C | 2142 |
| HES080H43C | 3142 |
| HES100H43C | 4142 |
| HES125H43C | 5142 |
| HES160H43C | 6142 |
| HES063M43C | 2342 |
| HES080M43C | 3342 |
| HES100M43C | 4342 |
| HES125M43C | 5342 |
| HES160M43C | 6342 |
| HES200M43C | 7342 |
| HES200H43C | 7142 |
| HES250M43C | 8342 |
| HES320M43C | 9342 |

- Verify if the setting value of Pr01-18 (Rated power of the synchronous motor) is the rated power (kW) of the corresponding motor. Verify also if the setting value of Pr00-07(Maximum value for the pressure command (bar)) fits version G, H, Z, and M.

### Step 3.Check Pressure Feedback Signal

- Firs, set input voltage Pr. 00-04 = 11 PO

  Selection of Display Mode

| | |
|---|---|
| Pr. 00-04 | 11: Display the signal of PO analog input terminal, with 0~10V corresponding to 0~100%. |

- Set Pr. 00-08=corresponding pressure settings of the 10V pressure sensor

  Maximum value of pressure feedback

| | |
|---|---|
| Pr. 00-08 | 0~250Bar |

- Set speed command to 10rpm and press【RUN】. Check the pressure value is >0 on the pressure gauge.

  When the pressure value is ≤0,

  ☑ Gradually increase the rotation speed.

  ☑ Check that each directional valve is closed.

  When the pressure value is ＞0

  ☑ Check that the voltage reading displayed on the operation panel is consistent with the pressure reading on the pressure gauge.

  Example: 10V on the pressure sensor corresponds to 250bar. When the pressure gauge reading is 50 bar, the output voltage on the pressure sensor should be approximately 50/250*10=2V. So the voltage displayed on the operation panel will be 20.0(%).

- Meanwhile, observe if there is any oil leak.

### Step 4. Check Pressure and Flow Commands

- This action does not need to start the servo oil pump.
- For the firmware version is 2.04 and above, theoretical values of three-point calibration of pressure and flow commands are auto-imported after entering HES ID code. Afterward, carry on the detailed adjustment with the following methods.
- Pr. 00-09 = 1 refers to the pressure control mode

  Pressure Control Mode

| | |
|---|---|
| Pr. 00-09 | 0: Speed control<br>1: Pressure control |

- Pr. 00-04 = 12 sets the PI input voltage

  Selection of Display Mode

| | |
|---|---|
| Pr. 00-04 | 12: Display the signal value of the PI analog input terminal, with 0~10V corresponding to 0~100%. |

- Pr. 00-07 = corresponding pressure value with 10V on the pressure controller command

  Maximum pressure command

| | |
|---|---|
| Pr. 00-07 | 0~250Bar |

- With the maximum pressure set by the controller, observe the associated value displayed on the operation panel and set it to 00-14.

- With the controller setting at half the maximum pressure, observe the associated value displayed on the operation panel and set it to 00-15.
- With the controller setting at the lowest pressure, observe the associated value displayed on the operation panel and set it to 00-16.

Example: 10V on the pressure sensor corresponds to 250bar. If the maximum pressure on the controller is 140bar and corresponds to 10V, the Pr. 00-07=140. Set 140bar through the controller and the voltage reading displayed on the operation panel is approximately 56.0(140/250*100%). Enter this value to Pr. 00-14. Next, set 70bar through the controller and the voltage reading displayed on the operation panel is approximately 28.0 (70/250*100%). Enter this value to Pr. 00-15. Lastly, set 0bar through the controller and the voltage reading displayed on the operation panel is approximately 0.0(0/250*100%). Enter this value to Pr. 00-16.

Example: 10V on the pressure sensor corresponds to 250bar. However, the maximum pressure on the controller is 140bar and corresponds to 7V. As a result, Pr. 00-07= 140/7*10=200. The following steps are the same as described in the previous example. Set 200bar through the controller first, followed by setting 100bar, and 0bar in the last step. Enter the corresponding values to the associated parameters.

- Pr. 00-04 = 25 refers to the QI input voltage

Selection of Display Mode

| | |
|---|---|
| Pr. 00-04 | 25: Displays the signal value of the QI analog input terminal, with 0~10V corresponding to 0~100%. |

- Set 100% flow rate through the controller, observe the reading displayed on the operation panel and enter it to 00-17
- Set 50% flow rate through the controller, observe the reading displayed on the operation panel and enter it to 00-18
- Set 0% flow rate through the controller, observe the reading displayed on the operation panel and enter it to 00-19

## Step 5. Send Run Command via Controller

- Check that Pr. 00-09 is 1 (pressure control mode)

Pressure Control Modes

| | |
|---|---|
| Parameter00-09 Settings | 0: Speed Control<br>1: Pressure Control |

- Pr. 01-01=1

Source of Run Command

| | |
|---|---|
| Pr. 01-01 | 0: Operated by digital operator<br>1: Operated by external terminals, Stop on keypad is disabled<br>2: Communication port RS-485 is activated and Stop on keypad is disabled |

- In case of power outage, connect SON-COM and turn on the power supply.

**Step 6. Bleed the circuit and make sure if there is any plastic material in the barrel. The machine can start operation only when there are no plastic materials inside the barrel.**

- For low-pressure and low-speed conditions (within 30% of the rated values), use the "manual operation" through the controller for the operation of each cylinder. During the operation, check the pipe connection for leaks or strange noise in the pump.

- When the air is bleeding completely, if there is any pressure fluctuation during operation, please adjust the pressure control Parameter PI in accordance with the method described in the "Description of Parameters".

**Step 7. Adjustment for injection/pressure holding**

- Heat up the barrel to the required temperature and set the controller in manual control mode.
- Set the Ki value of the three-stage PI to 0 (Pr. 00-21, 00-23, and 00-25) and the three-stage Kp value to be small (≤50.0)≤
- Execute the injection, with "Preset Target" set at low pressure (＜50Bar) and low flow rate (＜30%)
- Press "Injection" on the controller and the injection will be started or the system will directly enter the pressure holding operation (depending on the location of the oil cylinder)
- In the hold up state, Increase the speed bandwidth to the maximum value of 40Hz (Pr. 00-10) while causing no vibration to the hybrid servo motor.
- In the pressure holding state, when the pressure gauge needle or the monitored waveform shows no signs of vibration, the pressure feedback is stabilizing. Now the three sets of Kp values can be increased.
- When the pressure feedback becomes unstable, lower the three sets of Kp values by 20% (Example: lower the preset values of the three sets of Kp values from 100% to 80%), followed by adjusting the three sets of Ki values to eliminate the steady-state error and speed up the system response.
- Upon completion of the above steps, increase the pressure command of "Preset Target".
- Observe if the pressure feedback becomes stable. Proceed with troubleshooting in case of any anomaly, as described below:

Troubleshooting for Pressure Instability

**Unstable pressure over the entire section**

1. Set Pr. 00-09 = 0 for speed control
2. With the oil line in the closed state, send the low speed rotation command to make the pressure feedback 40~50% of the pressure command value (Pr. 00-07)
3. Check if the pressure waveform shows any jitters through the monitoring software.
   - Jitter in Pressure Waveform

     The possible cause is interference from ground. If the motor or the three-phase power supply is grounded, disconnect the ground wire. If the motor or the three-phase power supply is not grounded, add the ground wire for interference protection.

     The other possibility is the ground issue of the shielding mesh (as illustrated by the bold red lines in the figure below). If the shielding mesh is grounded, disconnect the ground wire. If the shielding mesh is not grounded, add the ground wire for interference protection.

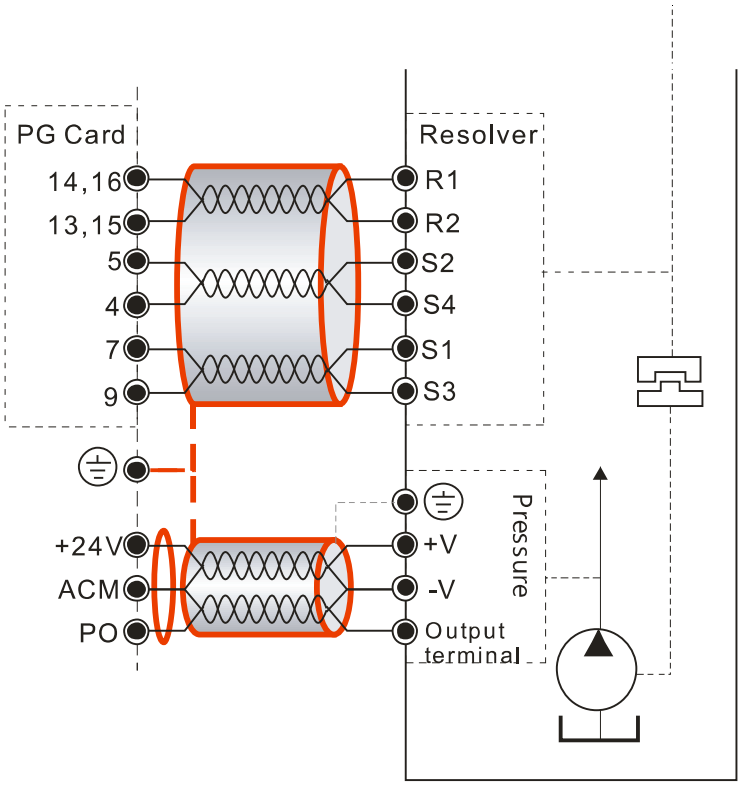


4. Please contact the original manufacturer if the anomaly still cannot be resolved after resorting to the methods described above.

## Step 8. Adjustment of System Transient Response

- Reduce the pressure ramp up time by increasing Kp1 (Pr. 00-20) and reducing Ki1 (Pr. 00-21) times
- When the pressure is over-adjusted, increase Kp3 (Pr. 00-24) and reduce Ki3 (Pr. 00-25) times

# Confluence Machine Tuning Procedure

Follow the associated descriptions in Chapter 2 to lay out the wiring.

Follow steps 1 and 2 described above to enter the electrical codes for the master/slave machines. Then proceed with the steps below.

## Master setting

- Set the Parameter 03-06 = 1

  Multifunction Output 2 (MO1)

| | |
|---|---|
| Setting value of Pr. 03-06 | 1: Operation indication |

- Connect the Master's MO1 output terminal to the Slave's SON terminal and Master's MCM terminal to the Salve's COM terminal.

- For the firmware version 2.03 and above, it is not necessary to perform the two steps described above

- Set the Parameter 03-13 = 1

  Confluence Master/Slave Selection

| | |
|---|---|
| Setting value of Pr. 03-13 | 0: No function |
| | 1: Master 1 |
| | 2: Slave/Master 2 |
| | 3: Slave/Master 3 |

- Set the Parameter 03-14

  Slave's proportion of the Master's flow

| | |
|---|---|
| Setting value of Pr. 03-14 | 0.0~6553.5% |

- For firmware version 2.03 and above, the Parameter 03-17 can be configured to determine the activation level for the Slave

  Slave's activation level

| | |
|---|---|
| Setting value of Pr. 03-17 | 0~100% |

## Slave setting

- Parameter 01-01=1

  Source of operation command

| | |
|---|---|
| Setting value of Pr. 01-01 | 0: Operation by using the digital keypad |
| | 1: Operation by using the external terminals. The Stop button on the keypad is disabled. |
| | 2: Communication using RS-485. The Stop button on the keypad is disabled |

- For firmware version 2.03 and above, set the Parameter 01-01=2

Source of operation command

| | |
|---|---|
| Setting value of Pr. 01-01 | 0: Operation by using the digital keypad |
| | 1: Operation by using the external terminals. The Stop button on the keypad is disabled. |
| | 2: Communication using RS-485. The Stop button on the keypad is disabled |

- Set the Parameter 03-15 = 1

Source of Frequency Command

| | |
|---|---|
| Setting value of Pr. 03-15 | 0: Digital Operation Panel |
| | 1: RS485 Communication |
| | 2~5: reserved |

- Shut down the power and then supply the power again

Set an arbitrary value of the frequency command at the Master to check if the Slave has the same value of the frequency command

Set 10rpm at the Master and then press RUN to see if the Slave is also running. If not, check the wiring or the parameter setting for any problem

- Set the Slave Parameter 03-13 = 2

Confluence Master/Slave Selection

| | |
|---|---|
| Setting value of Pr. 03-13 | 0: No function |
| | 1: Master 1 |
| | 2: Slave/Master 2 |
| | 3: Slave/Master 3 |

- For firmware version 2.03 and above, the Parameter 03-21 can be set at the Slave to decide if the Salve is performing the reversed operation for depressurization.

Note: If it is required to reverse the operation for depressurization at the Slave, it is necessary to make sure that the pump outlet port is not installed with a check valve and the Parameter 03-16 should be set as 500%

Slave reverse operation for depressurization

| | |
|---|---|
| Setting value of Pr.03-21 | 0: Disable |
| | 1: Enable |

Limit for the Slave reverse depressurization torque

| | |
|---|---|
| Setting value of Pr. 03-16 | 0~500% |

- Shut off the power and the re-supply power for the Slave, and then set the Slave in the speed control mode

Speed Control Mode

| | |
|---|---|
| Setting value of Pr. 00-09 | 0: Speed control<br>1: Pressure control |

In this case, the Master can be tuned according to the Step 3 – Step 6 described above

# Confluence/Diversion Mode Adjustment Procedure

Follow the associated descriptions in Chapter 2 to lay out the wiring.

In the diversion state, follow steps 1-8 described above to individually adjust the parameters of each driver.

In a confluence condition, please refer to the machine adjustment procedure for the confluence operation

Complete the above steps.

Set the Master for pressure control mode

- Parameter 00-09 = 1 for pressure control mode

Pressure control mode

| | |
|---|---|
| Setting value of Pr. 00-09 | 0: Speed control<br>1: Pressure control |

Set the Slave for speed control mode

- Parameter 00-09 = 0 for speed control mode

Speed Control Mode

| | |
|---|---|
| Setting value of Pr.00-09 | 0: Speed control<br>1: Pressure control |

Respectively set the master/slave multi-function input state. For the firmware version 2.03 and above, it is necessary to set these parameters for the Slave only

- Parameter 03-00~03-02 = 45 confluence/diversion signal input

Multi-function Input

| | |
|---|---|
| Setting values of Pr. 03-00~03-02 | 0: No function<br>I45: Confluence / Diversion signal input |

- Through the controller, perform the entire confluence/diversion operation.

# *Chapter 4 Parameters*

4-1 Summary of Parameter Settings
4-2 Detailed Description of Parameters

# 4-1 Summary of Parameter Settings

## 00 System Parameters

⁄ You can set this parameter during operation

| Parameter code | Function of the parameter | Settings | Default value | VF | FOCPG | FOCPM |
|---|---|---|---|---|---|---|
| 00-00 | Hybrid Servo Controller model code ID | 12：230V, 7.5HP<br>13：460 V, 7.5HP<br>14：230V, 10HP<br>15：460V, 10HP<br>16：230V, 15HP<br>17：460V, 15HP<br>18：230V, 20HP<br>19：460V, 20HP<br>20：230V, 25HP<br>21：460V, 25HP<br>22：230V, 30HP<br>23：460V, 30HP<br>24：230V, 40HP<br>25：460V, 40HP<br>26：230V, 50HP<br>27：460V, 50HP<br>29：460V, 60HP<br>31：460V, 75HP<br>33：460V, 100HP | Read only | ○ | ○ | ○ |
| 00-01 | Display of rated current of the Hybrid Servo Controller | Display by models | Read only | ○ | ○ | ○ |
| 00-02 | Reset parameter settings | 0: No function<br>1: Parameter locked<br>5: Rest the kWh when the motor drive stops<br>10: Reset parameter values | 0 | ○ | ○ | ○ |
| 00-03 | Software version | Read only | Read only | ○ | ○ | ○ |

| | Parameter code | Function of the parameter | Settings | Default value | VF | FOCPG | FOCPM |
|---|---|---|---|---|---|---|---|
| ✓ | 00-04 | Selection of multi-function display | 0: Display the output current (A)<br>1: Reserved<br>2: Display the actual output frequency (H)<br>3: Display the DC-BUS voltage (U)<br>4: Display the output voltage (E)<br>5: Display the output power angle (n)<br>6: Display the output power in kW (P)<br>7: Display the actual motor speed rpm (r)<br>8: Display the estimated output torque (%)<br>9: Display the PG feedback (G)<br>10: Reserved<br>11: Display the signal value of the analog input terminal PO %<br>12: Display the signal value of the analog input terminal PI %<br>13: Display the signal value of the analog input terminal AUI %<br>14: Display temperature of the heat sink in °C (t.)<br>15: Display temperature of IGBT in °C (T)<br>16: The status of digital input (ON/OFF) (i)<br>17: The status of digital output (ON/OFF) (o)<br>18: Reserved<br>19: The corresponding CPU pin status of the digital input (i.)<br>20: The corresponding CPU pin status of the digital output (o.)<br>21~24: Reserved<br>25: Display the signal value of the analog input terminal QI % (5.)<br>26: Display the actual pressure value (Bar) (b.)<br>27: Display the kWh value (K)<br>28: Display the motor temperature ( support KTY84 only) (T.)<br>29: Over load rate of motor drive<br>30: Over load rate of motor HES-A models | 0 | ○ | ○ | ○ |
| ✓ | 00-05 | Analog output function selection | 0: Output frequency (Hz) | 0 | ○ | ○ | ○ |
| | | | 1: Frequency command (Hz) | | ○ | ○ | ○ |
| | | | 2: Motor speed (Hz) | | ○ | ○ | ○ |
| | | | 3: Output current (A) | | | ○ | ○ |
| | | | 4: Output voltage | | ○ | ○ | ○ |
| | | | 5: DC Bus voltage | | ○ | ○ | ○ |
| | | | 6: Power factor | | ○ | ○ | ○ |
| | | | 7: Power | | ○ | ○ | ○ |
| | | | 8: Output torque | | ○ | ○ | ○ |
| | | | 9: PO | | ○ | ○ | ○ |
| | | | 10: PI | | ○ | ○ | ○ |
| | | | 11: AUI | | ○ | ○ | ○ |
| | | | 12~20: Reserved | | ○ | ○ | ○ |
| | 00-06 | Display the speed (rpm) defined by the user | 0~39999 rpm | 2500 | ○ | ○ | ○ |
| ✓ | 00-07 | Maximum value for the pressure command | 0~400Bar | 140 | ○ | ○ | ○ |
| ✓ | 00-08 | Maximum pressure feedback value | 0~400 Bar | 250 | ○ | ○ | ○ |
| | 00-09 | Pressure control mode | 0: Speed control<br>1: Pressure control | 0 | ○ | ○ | ○ |
| | 00-10 | Speed bandwidth | 0~40Hz | 20 | | ○ | ○ |
| ✓ | 00-11 | Pressure feedback filtering time PO | 0.000~1.000 second | 0.000 | ○ | ○ | ○ |
| ✓ | 00-12 | Pressure command filtering time PI | 0.000~1.000 second | 0.000 | ○ | ○ | ○ |

| | Parameter code | Function of the parameter | Settings | Default value | VF | FOCPG | FOCPM |
|---|---|---|---|---|---|---|---|
| ✓ | 00-13 | Flow command filtering time QI | 0.000~1.000 second | 0.000 | ○ | ○ | ○ |
| ✓ | 00-14 | Percentage of the pressure command value (Max) | 0.0~100.0% | 56.0 | ○ | ○ | ○ |
| ✓ | 00-15 | Percentage of the pressure command value (Mid) | 0.0~100.0% | 28.0 | ○ | ○ | ○ |
| ✓ | 00-16 | Percentage of the pressure command value (Min) | 0.0~100.0% | 0.0 | ○ | ○ | ○ |
| ✓ | 00-17 | Percentage of the flow command value (Max) | 0.0~100.0% | 100.0 | ○ | ○ | ○ |
| ✓ | 00-18 | Percentage of the flow command value (Mid) | 0.0~100.0% | 50.0 | ○ | ○ | ○ |
| ✓ | 00-19 | Percentage of the flow command value (Min) | 0.0~100.0% | 0.0 | ○ | ○ | ○ |
| ✓ | 00-20 | P gain 1 | 0.0~1000.0 | 50.0 | ○ | ○ | ○ |
| ✓ | 00-21 | I integration time 1 | 0.00~500.00 seconds | 2.00 | ○ | ○ | ○ |
| ✓ | 00-22 | P gain 2 | 0.0~1000.0 | 50.0 | ○ | ○ | ○ |
| ✓ | 00-23 | I integration time 2 | 0.00~500.00 seconds | 2.00 | ○ | ○ | ○ |
| ✓ | 00-24 | P gain 3 | 0.0~1000.0 | 50.0 | ○ | ○ | ○ |
| ✓ | 00-25 | I integration time 3 | 0.00~500.00 seconds | 2.00 | ○ | ○ | ○ |
| ✓ | 00-26 | Pressure stable region | 0~100% | 25 | ○ | ○ | ○ |
| ✓ | 00-27 | Base pressure | 0.0~100.0% | 0.1 | ○ | ○ | ○ |
| ✓ | 00-28 | Depressurization speed | 0~100% | 25 | ○ | ○ | ○ |
| ✓ | 00-29 | Ramp up rate of pressure command | 0~1000ms | 0 | ○ | ○ | ○ |
| ✓ | 00-30 | Ramp down rate of pressure command | 0~1000ms | 100 | ○ | ○ | ○ |
| ✓ | 00-31 | Ramp up rate of flow command | 0~1000 ms | 80 | ○ | ○ | ○ |
| ✓ | 00-32 | Ramp down rate of flow command | 0~1000 ms | 80 | ○ | ○ | ○ |
| ✓ | 00-33 | Valve opening delay time | 0~200 ms | 0 | ○ | ○ | ○ |
| | 00-34 | Reserved | | | | | |
| ✓ | 00-35 | Over-pressure detection level | 0~400Bar | 230 | ○ | ○ | ○ |
| ✓ | 00-36 | Detection of disconnection of pressure feedback | 0 : No function<br>1: Enable (only for the pressure feedback output signal within 1~5V) | 0 | ○ | ○ | ○ |
| ✓ | 00-37 | Differential gain | 0.0~100.0 % | 0.0 | ○ | ○ | ○ |
| | 00-38 | Pressure/flow control function selection | Bit 0: 0: Switch the PI Gain according to the pressure feedback level<br>1: Switch the PI Gain according to the multi-function input terminal<br>Bit 1: 0: No pressure/flow control switch<br>1: Switch between the pressure and flow control | 0 | ○ | ○ | ○ |
| ✓ | 00-39 | I gain of pressure overshoot 1 | 0.00~500.00 seconds | 0.2 | ○ | ○ | ○ |
| ✓ | 00-40 | differential gain 2 | 0.0~100% | 0.0 | | | |
| ✓ | 00-41 | differential gain 3 | 0.0~100% | 0.0 | | | |
| ✓ | 00-42 | Pressure overshoot level | 0~100% | 2 | ○ | ○ | ○ |
| ✓ | 00-43 | Percentage of maximum flow | 0~100% | 100 | ○ | ○ | ○ |
| ✓ | 00-44 | Pressure command | 0~400 bar | 0 | ○ | ○ | ○ |
| ✓ | 00-45 | Percentage of flow command | 0~100% | 0 | ○ | ○ | ○ |
| ✓ | 00-46 | Pressure reference S1 time | 0~1000ms | 0 | ○ | ○ | ○ |
| ✓ | 00-47 | Pressure reference S2 time | 0~1000ms | 0 | ○ | ○ | ○ |
| ✓ | 00-48 | Flow reference S1 time | 0~1000ms | 0 | ○ | ○ | ○ |

| | Parameter code | Function of the parameter | Settings | Default value | VF | FOCPG | FOCPM |
|---|---|---|---|---|---|---|---|
| ✓ | 00-49 | Flow reference S2 time | 0~1000ms | 0 | ○ | ○ | ○ |
| ✓ | 00-50 | Speed bandwidth 2 | 0~40Hz | 20 | ○ | ○ | ○ |
| ✓ | 00-51 | Speed bandwidth 3 | 0~40Hz | 20 | ○ | ○ | ○ |
| ✓ | 00-52 | Overpressure detection time | 0.000~1.000sec | 0.01 | ○ | ○ | ○ |
| ✓ | 00-53 | Oil shortage detection time | 0.0~60.0sec | 0.0 | ○ | ○ | ○ |
| ✓ | 00-54 | Pump running reversely detection time | 0.0~60.0sec | 0.0 | ○ | ○ | ○ |
| | 00-55 ~ 00-58 | Reserved | | | | | |

# 01 Motor Parameters

✓ You can set this parameter during operation.

| | Parameter code | Function of the parameter | Settings | Default value | VF | FOCPG | FOCPM |
|---|---|---|---|---|---|---|---|
| | 01-00 | Control mode | 0: VF<br>1: Reserved<br>2: Reserved<br>3: FOCPG<br>4: Reserved<br>5: FOCPM<br>6: Reserved | 5 | ○ | ○ | ○ |
| ✓ | 01-01 | Source of operation Command | 0: Operation by using the digital keypad<br>1: Operation by using the external terminals.<br>The Stop button on the keypad is disabled.<br>2: Communication using RS-485.<br>The Stop button on the keypad is disabled | 1 | ○ | ○ | ○ |
| | 01-02 | Motor's maximum operating Frequency | 50.00~600.00Hz | 166.67 | ○ | ○ | ○ |
| | 01-03 | Motor's rated frequency | 0.00~600.00Hz | 113.33 | ○ | ○ | ○ |
| | 01-04 | Motor's rated voltage | 230V Series: 0.1V~255.0V<br>460V Series: 0.1V~510.0V | 220.0<br>440.0 | ○ | ○ | |
| ✓ | 01-05 | Acceleration time setting | 0.00~600.00 seconds | 0.00 | ○ | ○ | ○ |
| ✓ | 01-06 | Deceleration time setting | 0.00~600.00 seconds | 0.00 | ○ | ○ | ○ |
| | 01-07 | Motor Parameter Auto Tuning | 0: No function | 0 | ○ | ○ | |
| | | | 1: Rolling test for induction motor(IM) (Rs, Rr, Lm, Lx, no-load current) | | ○ | ○ | |
| | | | 2: Static test for induction motor(IM) | | ○ | ○ | |
| | | | 3: Reserved | | ○ | ○ | |
| | | | 4: Auto measure the angle between magnetic pole and PG origin | | | | ○ |
| | | | 5: Rolling test for PM motor | | | | ○ |
| | 01-08 | Rated current of the induction motor (A) | 40~120% of the drive's rated current | #.## | | ○ | |
| ✓ | 01-09 | Rated power of the induction motor | 0~655.35kW | #.## | | ○ | |
| ✓ | 01-10 | Rated speed of the induction motor | 0~65535rpm<br>1710 (60Hz 4-pole); 1410 (50Hz 4-pole) | 1710 | | ○ | |
| | 01-11 | Number of poles of the induction motor | 2~20 | 4 | | ○ | |
| | 01-12 | No-load current of the induction motor (A) | 0~Default value of Parameter 01-08 | #.## | | ○ | |
| | 01-13 | Stator resistance (Rs) of the induction Motor | 0~65.535Ω | #.### | | ○ | |
| | 01-14 | Rotor resistance (Rr) of the induction Motor | 0~65.535Ω | #.### | | ○ | |
| | 01-15 | Magnetizing inductance (Lm) of the induction Motor | 0.0~6553.5mH | #.# | | ○ | |
| | 01-16 | Total leakage inductance (Lx) of the induction motor | 0.0~6553.5mH | #.# | | ○ | |
| | 01-17 | Rated current of the synchronous motor | 0~655.35 Amps | 0.00 | | | ○ |
| | 01-18 | Rated power of the synchronous motor | 0.00 – 655.35kW | 0.00 | | | ○ |
| | 01-19 | Rated speed of the synchronous motor | 0~65535rpm | 1700 | | | ○ |

| Parameter code | Function of the parameter | Settings | Default value | VF | FOCPG | FOCPM |
|---|---|---|---|---|---|---|
| 01-20 | Number of poles of the synchronous motor | 2~20 | 8 | | | ○ |
| 01-21 | Inertia of the synchronous motor's rotor | 0.0~6553.5 *$10^{-4}$ kg.$m^2$ | 0.0 | | | ○ |
| 01-22 | Stator's phase resistance (Rs) of the synchronous motor | 0.000~65.535Ω | 0.000 | | | ○ |
| 01-23 | Stator's phase inductance (Ld) of the synchronous motor | 0.00.0~655.35mH | 0.00 | | | ○ |
| 01-24 | Stator's phase inductance (Lq) of the synchronous motor | 0.00.0~655.35mH | 0.00 | | | ○ |
| 01-25 | Back EMF of the synchronous motor | 0~65535 V/ krpm | 0 | | | ○ |
| 01-26 | Encode type | 0: ABZ<br>1: ABZ+HALL (only used for Delta's servo motors)<br>2: ABZ+HALL<br>3: Resolver | 3 | | | ○ |
| 01-27 | PG Offset angle of synchronous motor | 0.0~360.0° | 0.0 | | | ○ |
| 01-28 | Number of poles of the resolver | 1~5 | 1 | | | ○ |
| 01-29 | Encoder pulse | 1~20000 | 1024 | | ○ | ○ |
| 01-30 | Encoder's input type setting | 0: No function<br>1: Phase A leads in a forward run command and phase B leads in a reverse run command<br>2: Phase B leads in a forward run command and phase A leads in a reverse run command<br>3: Phase A is a pulse input and phase B is a direction input. (low input=reverse direction, high input=forward direction)<br>4: Phase A is a pulse input and phase B is a direction input. (low input=forward direction, high input=reverse direction)<br>5: Single-phase input | 1 | | ○ | ○ |
| 01-31 | System control | 0: No function<br>1: ASR automatic tuning<br>2: Estimation of inertia | 1 | | ○ | ○ |
| 01-32 | Unity value of the system inertia | 1~65535 (256 = 1 per unit) | 260 | | ○ | ○ |
| 01-33 | Carrier frequency | 5KHz; 10KHz | 5 | ○ | ○ | ○ |
| 01-34 | Reserved | | | | | |
| 01-35 | Motor ID | 0 : Disabled<br>See 4-2 Description of Parameter Settings for more information | 0 | ○ | ○ | ○ |
| 01-36 | Change the rotation direction | 0: When the driver runs forward, the motor rotates counterclockwise. When the driver runs reverse, the motor rotates clockwise.<br>1: When the driver runs forward, the motor rotates clockwise.<br>When the driver runs reverse, the motor rotates counterclockwise. | 0 | ○ | ○ | ○ |
| 01-37 | HES ID # | 0: Disabled<br>See 4-2 Description of Parameter Settings for more information | 0 | ○ | ○ | ○ |

| | Parameter code | Function of the parameter | Settings | Default value | VF | FOCPG | FOCPM |
|---|---|---|---|---|---|---|---|
| ⚡ | 01-38 | Flux-Weakening voltage level | 0~100V | 10V | ○ | ○ | ○ |

# 02 Parameters for Protection

✓ You can set this parameter during operation.

| | Parameter code | Function of the parameter | Settings | Default value | VF | FOCPG | FOCPM |
|---|---|---|---|---|---|---|---|
| ✓ | 02-00 | Software brake level | 230V series: 350.0~450.0$V_{DC}$<br>460V series: 700.0~900.0$V_{DC}$ | 380.0<br>760.0 | ○ | ○ | ○ |
| | 02-01 | Present fault record | 0: No error record | 0 | ○ | ○ | ○ |
| | 02-02 | Second most recent fault record | 1: Over-current during acceleration (ocA) | 0 | ○ | ○ | ○ |
| | 02-03 | Third most recent fault record | 2: Over-current during deceleration (ocd) | 0 | ○ | ○ | ○ |
| | 02-04 | Fourth most recent fault record | 3: Over-current during constant speed (ocn) | 0 | ○ | ○ | ○ |
| | 02-05 | Fifth most recent fault record | 4: Ground fault (GFF) | 0 | ○ | ○ | ○ |
| | 02-06 | Sixth most recent fault record | 5: IGBT short-circuit (occ) | 0 | ○ | ○ | ○ |
| | | | 6: Over-current at stop (ocS) | | ○ | ○ | ○ |
| | | | 7: Over-voltage during acceleration (ovA) | | ○ | ○ | ○ |
| | | | 8: Over-voltage during deceleration (ovd) | | ○ | ○ | ○ |
| | | | 9: Over-voltage during constant speed (ovn) | | ○ | ○ | ○ |
| | | | 10: Over-voltage at stop (ovS) | | ○ | ○ | ○ |
| | | | 11: Low-voltage during acceleration (LvA) | | ○ | ○ | ○ |
| | | | 12: Low-voltage during deceleration (Lvd) | | ○ | ○ | ○ |
| | | | 13: Low-voltage during constant speed (Lvn) | | ○ | ○ | ○ |
| | | | 14: Low-voltage at stop (LvS) | | ○ | ○ | ○ |
| | | | 15: Phase loss protection (PHL) | | ○ | ○ | ○ |
| | | | 16: IGBT over-heat (oH1) | | ○ | ○ | ○ |
| | | | 17: Heat sink over-heat for 40HP and above (oH2) | | ○ | ○ | ○ |
| | | | 18: TH1 open: IGBT over-heat protection circuit error (tH1o) | | ○ | ○ | ○ |
| | | | 19: TH2 open: heat sink over-heat protection circuit error (tH2o) | | ○ | ○ | ○ |
| | | | 20: IGBT over heated and unusual fan function (oHF) | | ○ | ○ | ○ |
| | | | 21: Hybrid Servo Controller overload (oL) | | ○ | ○ | ○ |
| | | | 22: Motor over-load (EoL1) | | ○ | ○ | ○ |
| | | | 23: Reserved | | | | |
| | | | 24: Motor over-heat, detect by PTC (oH3) | | ○ | ○ | ○ |
| | | | 25: Reserved | | | | |
| | | | 26: Over-torque 1 (ot1) | | ○ | ○ | ○ |
| | | | 27: Over-torque 2 (ot2) | | ○ | ○ | ○ |
| | | | 28: Reserved | | ○ | ○ | ○ |
| | | | 29: Reserved | | ○ | ○ | ○ |
| | | | 30: Memory write error (cF1) | | ○ | ○ | ○ |
| | | | 31: Memory read error (cF2) | | ○ | ○ | ○ |
| | | | 32: Isum current detection error (cd0) | | ○ | ○ | ○ |
| | | | 33: U-phase current detection error (cd1) | | ○ | ○ | ○ |
| | | | 34: V-phase current detection error (cd2) | | ○ | ○ | ○ |
| | | | 35: W-phase current detection error (cd3) | | ○ | ○ | ○ |
| | | | 36: Clamp current detection error (Hd0) | | ○ | ○ | ○ |
| | | | 37: Over-current detection error (Hd1) | | ○ | ○ | ○ |
| | | | 38: Over-voltage detection error (Hd2) | | ○ | ○ | ○ |
| | | | 39: Ground current detection error (Hd3) | | ○ | ○ | ○ |
| | | | 40: Auto tuning error (AuE) | | | ○ | ○ |
| | | | 41: Reserved | | ○ | ○ | ○ |
| | | | 42: PG feedback error (PGF1) | | | ○ | ○ |
| | | | 43: PG feedback loss (PGF2) | | | ○ | ○ |
| | | | 44: PG feedback stall (PGF3) | | | ○ | ○ |

| | Parameter code | Function of the parameter | Settings | Default value | VF | FOCPG | FOCPM |
|---|---|---|---|---|---|---|---|
| | | | 45: PG slip error (PGF4) | | | ○ | ○ |
| | | | 46: Reserved | | ○ | ○ | ○ |
| | | | 47: Reserved | | ○ | ○ | ○ |
| | | | 48: Reserved | | | | |
| | | | 49: External fault input (EF) | | ○ | ○ | ○ |
| | | | 50: Emergency stop (EF1) | | ○ | ○ | ○ |
| | | | 51: Reserved | | | | |
| | | | 52: Password error(PcodE) | | ○ | ○ | ○ |
| | | | 53: Reserved | | ○ | ○ | ○ |
| | | | 54: Communication error (cE1) | | ○ | ○ | ○ |
| | | | 55: Communication error (cE2) | | ○ | ○ | ○ |
| | | | 56: Communication error (cE3) | | ○ | ○ | ○ |
| | | | 57: Communication error (cE4) | | ○ | ○ | ○ |
| | | | 58: Communication time out (cE10) | | ○ | ○ | ○ |
| | | | 59: PU time out (cP10) | | ○ | ○ | ○ |
| | | | 60: Braking transistor error (bF) | | ○ | ○ | ○ |
| | | | 61~6: Reserved | | ○ | ○ | ○ |
| | | | | | ○ | ○ | ○ |
| | | | 65: PG card information error (PGF5) | | | | ○ |
| | | | 66: Over pressure (ovP) | | ○ | ○ | ○ |
| | | | 67: Pressure feedback fault (PfbF) | | ○ | ○ | ○ |
| | | | 68: Oil pump runs reversely (Prev) | | | | |
| | | | 69: Oil shortage warning (noil) | | | | |
| | | | 70: Reserved | | | | |
| ✓ | 02-07 | Low voltage level | 160.0~220.0$V_{DC}$<br>320.0.0~440.0$V_{DC}$ | 180.0<br>360.0 | ○ | ○ | ○ |
| ✓ | 02-08 | PTC action selection | 0: Warn and keep operation<br>1: Warn and ramp to stop<br>2: Warn and coast to stop | 1 | ○ | ○ | ○ |
| ✓ | 02-09 | PTC level | 0.0~150.0%<br>0.0~150.0℃ | 50.0 | ○ | ○ | ○ |
| ✓ | 02-10 | PTC detection filtering time | 0.00~10.00 seconds | 0.20 | ○ | ○ | ○ |
| ✓ | 02-11 | PTC type | 0: Not assigned<br>1: KTY84 | 0 | ○ | ○ | ○ |
| ✓ | 02-12 | Motor fan activation level | 0.0~100.0%<br>0.0~150.0℃ | 50.0 | ○ | ○ | ○ |
| ✓ | 02-13 | Electronic thermal relay selection 1 | 0: Inverter motor<br>1: Standard motor<br>2: Disable | 2 | ○ | ○ | ○ |
| ✓ | 02-14 | Electronic thermal characteristic for motor | 30.0~600.0 seconds | 60.0 | ○ | ○ | ○ |
| | 02-15 | Output frequency at malfunction | 0.00~655.35 Hz | Read only | ○ | ○ | ○ |
| | 02-16 | Output voltage at malfunction | 0.0~6553.5 V | Read only | ○ | ○ | ○ |
| | 02-17 | DC voltage at malfunction | 0.0~6553.5 V | Read only | ○ | ○ | ○ |
| | 02-18 | Output current at malfunction | 0~655.35 Amps | Read only | ○ | ○ | ○ |
| | 02-19 | IGBT temperature at malfunction | 0.0~6553.5 ℃ | Read only | ○ | ○ | ○ |
| | 02-20 | Clear errors automatically(LvX) | 0: Disable, 1: Enable | 0 | ○ | ○ | ○ |
| | 02-21 | Input the parameter protection password | 1 ~ 9998 | 0 | | | |
| | 02-22 | Set up a parameter protection password | 1~9988, 10000 ~ 65535 | 0 | | | |
| | 02-23 ~ 02-30 Reserved | | | | | | |

# 03 Digital/Analog Input/Output Parameters

✓ You can set this parameter during operation.

| | Parameter code | Function of the parameter | Settings | Default value | VF | FOCPG | FOCPM |
|---|---|---|---|---|---|---|---|
| | 03-00 | Multi-function input command 3 (MI3) | 0: No function<br>44: Injection signal input<br>45: Confluence/Diversion signal input<br>46: Reserved<br>47: Multi-level pressure PI command 1<br>48: Multi-level pressure PI command 2<br>51: flow command | 0 | ○ | ○ | ○ |
| | 03-01 | Multi-function input command 4 (MI4) | | 0 | ○ | ○ | ○ |
| | 03-02 | Multi-function input command 5 (MI5) | | 0 | ○ | ○ | ○ |
| ✓ | 03-03 | Digital input response time | 0.001~ 30.000 sec | 0.005 | ○ | ○ | ○ |
| ✓ | 03-04 | Digital input operation direction | 0~65535 | 0 | ○ | ○ | |
| ✓ | 03-05 | Multi-function output 1 (Relay 1) | 0: No function<br>1: Operation indication<br>9: Hybrid Servo Controller is ready<br>11: Error indication<br>14: MO1 software brake output<br>44: Displacement switch signal<br>45: Motor fan control signal | 11 | ○ | ○ | ○ |
| ✓ | 03-06 | Multi-function Output 2 (MO1) | | 0 | ○ | ○ | ○ |
| ✓ | 03-07 | Multi-function Output 3 (MO2) | | 0 | ○ | ○ | ○ |
| ✓ | 03-08 | Multi-function output direction | 0~65535 | 0 | | ○ | |
| ✓ | 03-09 | Low-pass filter time of keypad display | 0.001~65.535 seconds | 0.100 | ○ | ○ | ○ |
| | 03-10 | Maximum output voltage for pressure feedback | 5.0~10.0 V | 10.0 | ○ | ○ | ○ |
| | 03-11 | Minimum output voltage for pressure feedback | 0.0~2.0 V | 0.0 | ○ | ○ | ○ |
| ✓ | 03-12 | Type of Pressure Feedback Selection | 0: Current<br>1: Voltage | 1 | | | |
| | 03-13 | Confluence Master/Slave Selection | 0: No function<br>1: Master 1<br>2: Slave/Master 2<br>3: Slave/Master 3 | 0 | ○ | ○ | ○ |
| | 03-14 | Slave's proportion of the Master's flow | 0.0~65535.5 % | 100.0 | ○ | ○ | ○ |
| ✓ | 03-15 | Source of frequency command | 0: Digital keypad<br>1: RS485 Communication<br>2~5: Reserved | 0 | ○ | ○ | ○ |
| ✓ | 03-16 | Limit for the Slave reverse depressurization torque | 0~500% | 20 | ○ | ○ | ○ |
| ✓ | 03-17 | Slave's activation level | 0.0~100.0% | 50.0 | ○ | ○ | ○ |
| ✓ | 03-18 | Communication error treatment | 0: Warn and keep operation<br>1: Warn and ramp to stop<br>2: Warn and coast to stop<br>3: No action and no display | 3 | ○ | ○ | ○ |
| ✓ | 03-19 | Time-out detection | 0.0~100.0 seconds | 0.100 | ○ | ○ | ○ |
| ✓ | 03-20 | Start-up display selection | 0: F (frequency command)<br>1: H (actual frequency)<br>2: Multi-function display (user-defined 00-04)<br>3: A (Output current) | 0 | ○ | ○ | ○ |
| ✓ | 03-21 | Slave reverse operation for depressurization | 0: Disabled<br>1: Enabled | 0 | ○ | ○ | ○ |
| ✓ | 03-22 | Slave closing level | 0 ~ 400 | 400 | ○ | ○ | ○ |

# 4-2 Description of Parameter Settings

## 00 System Parameters

✓ You can set this parameter during operation

### 00-00 Hybrid Servo Controller model code ID

Control mode **VF** **FOCPG** **FOCPM** Factory default: Read only

Settings Read only

### 00-01 Display of rated current of the Hybrid Servo Controller

Control mode **VF** **FOCPG** **FOCPM** Factory default: Read only

Settings Read only

📖 Parameter 00-00 is used to determine the capacity of the Hybrid servo motor which has been configured in this parameter in factory. In addition, the current value of Parameter (00-01) can be read out to check if it is the rated current of the corresponding model. Display value of the current value of Parameter 00-01 for the related Parameter 00-00.

| 230V Series | | | | | | | | |
|---|---|---|---|---|---|---|---|---|
| Power (KW) | 5.5 | 7.5 | 11 | 15 | 18.5 | 22 | 30 | 37 |
| Horse Power (HP) | 7.5 | 10 | 15 | 20 | 25 | 30 | 40 | 50 |
| Model ID | 12 | 14 | 16 | 18 | 20 | 22 | 24 | 26 |

| 460V Series | | | | | | | | | | | |
|---|---|---|---|---|---|---|---|---|---|---|---|
| Power (KW) | 5.5 | 7.5 | 11 | 15 | 18.5 | 22 | 30 | 37 | 45 | 55 | 75 |
| Horse Power (HP) | 7.5 | 10 | 15 | 20 | 25 | 30 | 40 | 50 | 60 | 75 | 100 |
| Model ID | 13 | 15 | 17 | 19 | 21 | 23 | 25 | 27 | 29 | 31 | 33 |

### 00-02 Reset parameter settings

Control mode **VF** **FOCPG** **FOCPM** Factory default: 0

Settings
0: No function
1: Parameter locked
5: Rest the kWh at drive stop
10: Reset parameter values

📖 If it is necessary to restore the parameters to factory default, just set this parameter to “10”.

### 00-03 Software version

Control mode **VF** **FOCPG** **FOCPM** Factory default: #.##

Settings Read only

### ✓ 00-04 Selection of multi-function display

Control mode **VF** **FOCPG** **FOCPM** Factory default: 0

Settings
0: Display the output current (A)
1: Reserved
2: Display the actual output frequency (H)
3: Display the DC-BUS voltage (U)
4: Display the output voltage (E)
5: Display the output power angle (n)
6: Display the output power in kW (P)

7: Display the actual motor speed(r 00: forward speed; - 00: negative speed)

8: Display the estimated output torque (%) (t 0.0: positive torque; - 0.0: negative torque) (%)

9: Display the PG feedback (G)

10: Reserved

11: Display the signal value of the analog input terminal PO with 0~10V mapped to 0~100%

12: Display the signal value of the analog input terminal PI with 0~10V mapped to 0~100%

13: Display the signal value of the analog input terminal PI with -10~10V mapped to 0~100%

14: Display temperature of the heat sink in °C (t.)

15: Display temperature of the IGBT power module °C

16: The status of digital input (ON/OFF)

17: The status of digital output (ON/OFF)

18: Reserved

19: The corresponding CPU pin status of the digital input

20: The corresponding CPU pin status of the digital output

21~24: Reserved

25: Display the signal value of the analog input terminal OI with 0~10V mapped to 0~100%

26: Display the actual pressure value (Bar)

27: Display the kWh value

28: Display the motor temperature (currently only support KTY84)

29: Over load rate of motor drive (OL occurred when reaching 100%)

30: Over load rate of motor with last digit A of HES (EOL1 occurred when reaching 100%)

This parameter defines the contents to be displayed in the U page of the digital keypad KPV-CE01 (as shown in the figure).

## 00-05 Analog output function selection

Control mode **VF** **FOCPG** **FOCPM** Factory default: 0

Settings 0~20

**Summary of functions**

| Setting Value | Function | Description |
|---|---|---|
| 0 | Output frequency (Hz) | The maximum frequency is 100% |
| 1 | Frequency command (Hz) | The maximum frequency is 100% |
| 2 | Motor speed (Hz) | 600Hz is used as 100% |
| 3 | Output current (A) | 2.5 times of the rated current of the Hybrid Servo Controller is used as 100% |
| 4 | Output voltage | 2 times of the rated current of the Hybrid Servo Controller is used as 100% |
| 5 | DC BUS voltage | 450V (900V) =100% |

| | | |
|---|---|---|
| 6 | Power factor | -1.000~1.000=100% |
| 7 | Power | Rated power of the drive =100% |
| 8 | Output torque | Rated torque =100% |
| 9 | PO | (0~10V=0~100%) |
| 10 | PI | (0~10V=0~100%) |
| 11 | AUI | (-10~10V=0~100%) |
| 12~20 | Reserved | |

## 00-06 Display the speed (rpm) defined by the user

Control mode **VF** **FOCPG** **FOCPM** Factory default: 0

Settings 0~39999 rpm

Set the maximum speed of the motor corresponding to the 100% flow.

When the control mode is FOCPM(Pr01-00=5), Pr00-06 will follow the setting at Pr01-20 <Number of poles of the synchronous motor> to modify Pr01-02<Motor's maximum operating frequency>. frequency = rpm*Pole/120

## 00-07 Maximum value for the pressure command

Control mode **VF** **FOCPG** **FOCPM** Factory default: 250

Settings 0~400Bar

The 0~10V for the pressure command on the controller is mapped to 0~the value of this parameter.

Firmware version 2.04 and above, maximum value 400Bar, the previous version's maximum allowed value is 250Bar.

When setting up Pr00-07 and Pr00-08, Pr00-14<Percentage for the pressure command value (Max) and Pr00-15<Percentage for the pressure command value (Mid) will also be modified. However when the pressure command is bigger than the pressure feedback, Pr00-07 cannot be set up.

Pr00-07 can be set up while the motor drive is running, but Pr00-07 has to be smaller than Pr00-08.

## 00-08 Maximum pressure feedback value

Control mode **VF** **FOCPG** **FOCPM** Factory default: 250

Settings 0~400Bar

The 0~10V for the pressure sensor is mapped to 0~the value of this parameter.

## 00-09 Pressure control mode

Control mode **VF** **FOCPG** **FOCPM** Factory default: 0

Settings 0: Speed control
1: Pressure control

This parameter determines the control mode of the Hybrid Servo Controller. It is recommended to use the speed control at the initial start up. After the motor, pump, pressure sensor, and the entire system are checked without any error, switch to the pressure control mode to enter the process control.

When under Pr00-09<Pressure control mode>, Pr01-05<Acceleration time setting> and Pr01-06<Deceleration time setting> have to be set as 0 to make the pressure control mode stable.

## 00-10 Speed bandwidth

Control mode **FOCPG FOCPM** Factory default: 20

Settings 0~40Hz

Set the speed response. The larger value indicates the faster response.

## 00-11 Pressure feedback filtering time PO

## 00-12 Pressure Command Filter Time PI

## 00-13 Pressure Command Filter Time QI

Control mode **VF FOCPG FOCPM** Factory default: 0.000

Settings 0.000~1.000 seconds

Noises may reside in the analog input signals of the control terminals PO, PI, and QI. The noise may affect the control stability. Use an input filter to eliminate such noise.

If the time constant is too large, a stable control is obtained with poorer control response. If it is too small, a fast response is obtained with unstable control. If the optimal setting is not known, adjust it properly according to the instability or response delay.

## 00-14 Percentage of the pressure command value (MAX)

Control mode **VF FOCPG FOCPM** Factory default: 56.0

Settings 0.0 ~ 100.0%

## 00-15 Percentage of the pressure command value (Mid)

Control mode **VF FOCPG FOCPM** Factory default: 28.0

Settings 0.0 ~ 100.0%

## 00-16 Percentage of the pressure command value (Min)

Control mode **VF FOCPG FOCPM** Factory default: 0.0

Settings 0.0 ~ 100.0%

When setting up Pr00-07<Max. value for the pressure command> and Pr00-08<Max. pressure feedback value>, Pr00-14 and Pr00-15 will also be modified. However when the pressure command is bigger than the pressure feedback, Pr00-07 cannot be set up.

Pr00-07 can be set up while the motor drive is running, but Pr00-07 has to be smaller than Pr00-08.

To set these parameters, it is necessary to set Parameter 00-09 as 1

Parameter 00-04 = 12 for PI input voltage

Send the maximum pressure command through the controller and then check the multi-function display page to enter this value into 00-14

Send a half pressure command through the controller and then check the multi-function display page to enter this value into 00-15

Send the minimum pressure command through the controller and then check the multi-function display page to enter this value into 00-16

Example: If the pressure sensor indicates 250bar at 10V. If the controller's maximum pressure of 140bar corresponds to 10V, then Parameter 00-07=140. Set the pressure as 140bar by using the controller, the voltage value shown on the display is about 56.0 (140/250 * 100%). Enter this value into the Parameter 00-14. Then set the pressure as 70bar on the controller, and now the value displayed on the keypad is about 28.0 (70/250 * 100%). Enter this value to the Parameter 00-15. Then set the pressure as 0 bar on controller, and the voltage value shown on the keypad is about 0.0 (0/250 * 100%). Enter this value in the Parameter 00-16.

### 00-17 Percentage of the flow command value (Max)

Control mode **VF** **FOCPG** **FOCPM** Factory default: 100.0

Settings 0.0~100.0%

### 00-18 Percentage of the flow command value (Mid)

Control mode **VF** **FOCPG** **FOCPM** Factory default: 50.0

Settings 0.0~100.0%

### 00-19 Percentage of the flow command value (Min)

Control mode **VF** **FOCPG** **FOCPM** Factory default: 0.0

Settings 0.0~100.0%

📖 To set these parameters, it is necessary to set Parameter 00-09 as 1

📖 Parameter 00-04 = 25 for QI input voltage

Send the 100% flow rate through the controller and then check the multi-function display page to enter this value into 00-17

Send the 50% flow rate through the controller and then check the multi-function display page to enter this value into 00-18

Send the 0% flow rate through the controller and then check the multi-function display page to enter this value into 00-19

### 00-20 P gain 1
### 00-22 P gain 2
### 00-24 P gain 3

Control mode **VF** **FOCPG** **FOCPM** Factory default: 50.0

Settings 0.0～1000.0

### 00-21 I integration time 1
### 00-23 I integration time 2
### 00-25 I integration time 3

Control mode **VF** **FOCPG** **FOCPM** Factory default: 2.00

Settings 0.00~500.00 seconds

### 00-37 Differential gain
### 00-40 Differential gain 2
### 00-41 Differential gain 3

Control mode **VF** **FOCPG** **FOCPM** Factory setting: 0.0

Settings 0.0~100.0 %

📖 This parameter is functional only when Bit0 and Bit2 = 1 at Pr00-38.

### 00-26 Pressure stable region

Control mode **VF** **FOCPG** **FOCPM** Factory default: 25

Settings 0~100%

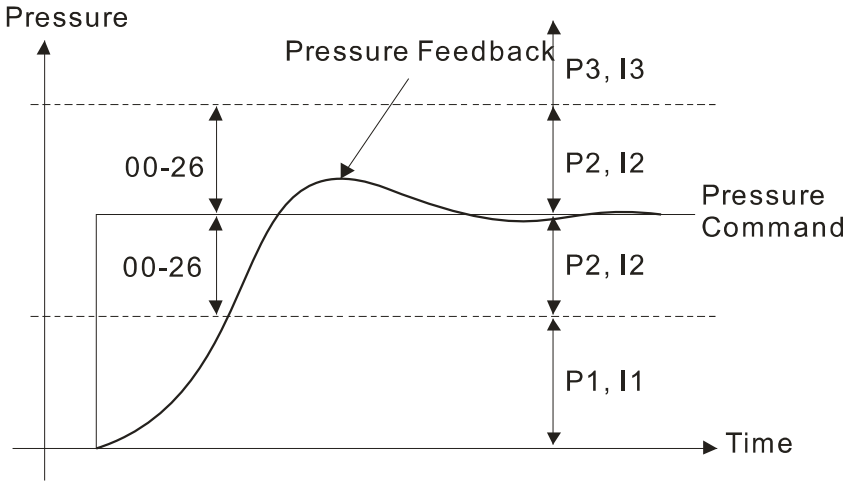


Adjust the Kp value to a proper level first, and then adjust the Ki value (time). If the pressure has overshoot, adjust the kd value.

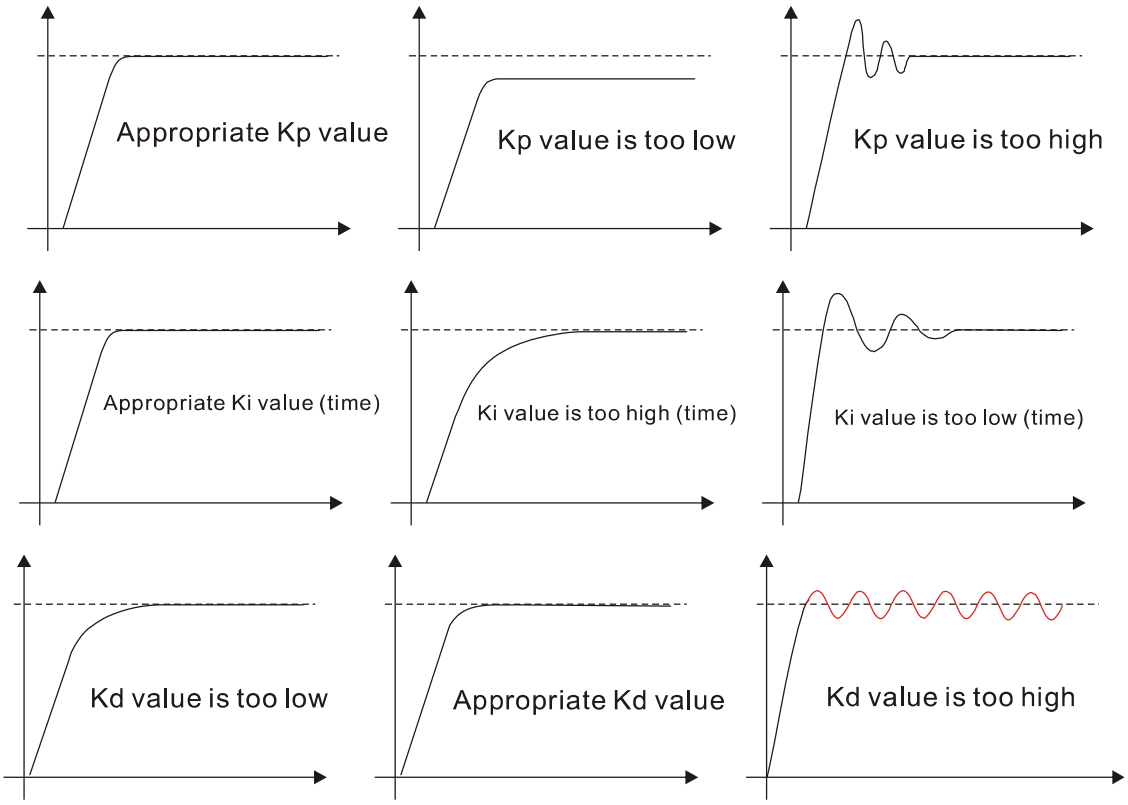


## 00-27 Base pressure

Control mode **VF** **FOCPG** **FOCPM** Factory default: 0.1

Settings 0.0~100.0%

Set the minimum pressure value 100% corresponding to Parameter 00-08

Typically, it is necessary to maintain a certain base pressure to ensure that the oil pipe is in fully filled condition so as to avoid the activation delay of the cylinder when a pressure/flow command is activated.

## 00-28 Depressurization speed

Control mode **VF** **FOCPG** **FOCPM** Factory default: 25

Settings 0~100%

Set the highest rotation speed at depressurization. The 100% value is mapped to Parameter 01-02 (the maximum rotation speed of the motor)

## 00-29 Ramp up rate of pressure command

Control mode **VF** **FOCPG** **FOCPM** Factory default: 0

Settings 0~1000ms

## 00-30 Ramp down rate of pressure command

Control mode **VF** **FOCPG** **FOCPM** Factory default: 100

Settings 0~1000ms

- Ramp the pressure value for the pressure command so as to reduce the vibration of the machine.
- Set the time required for ramping the pressure from 0~the maximum pressure (00-08).

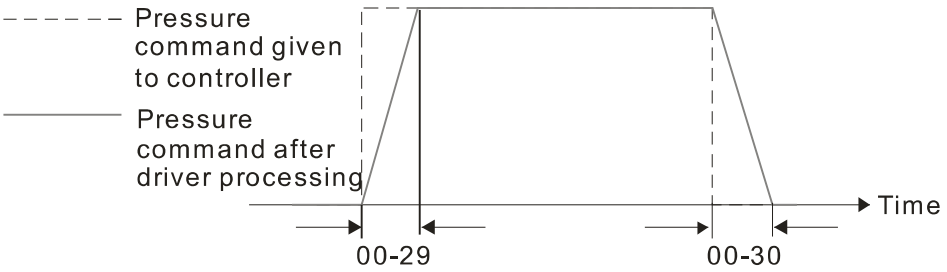


## 00-31 Ramp up rate of flow command

## 00-32 Ramp down rate of flow command

Control mode **VF** **FOCPG** **FOCPM** Factory default: 80

Settings 0~1000ms

- Ramp the flow value for the flow command so as to reduce the vibration of the machine.
- Set the time required for ramping the flow from 0~the maximum flow (01-02).

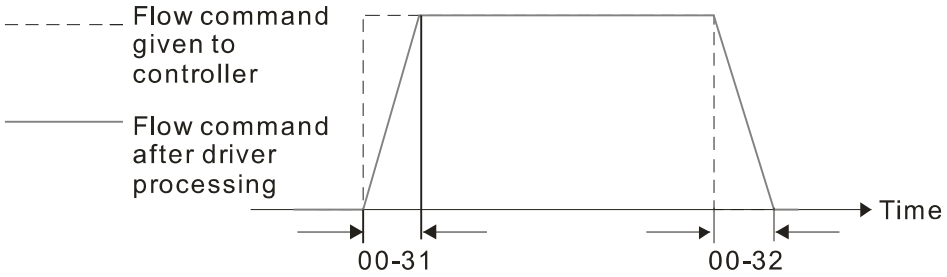


## 00-33 Valve opening delay time

Control mode **VF** **FOCPG** **FOCPM** Factory default: 0

Settings 0~200ms

- When both the pressure command and flow command activate the machine to start from idle, the flow starts to output. However, due to the slower response of the valve in the hydraulic circuit, the sudden surge of the pressure may occur. The pressure may recover to normal till the valve is fully opened. To avoid the aforementioned effect, set this parameter to increase time for the flow output delay.

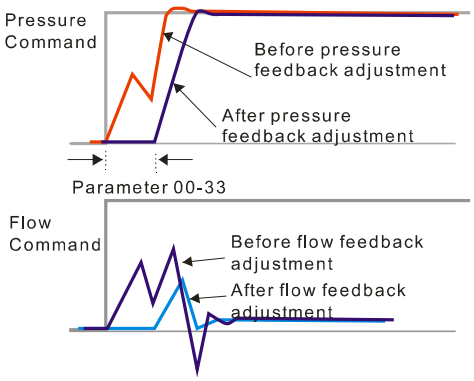

## 00-34 Reserved

## 00-35 Overpressure detection level

Control mode **VF** **FOCPG** **FOCPM** Factory default: 230

Settings 0~400 Bar

When the pressure feedback exceeds this parameter setting, an “ovP over pressure” error message may occur.

Firmware version 2.04 and above, maximum value 400Bar, the previous version’s maximum allowed value is 250Bar.

## 00-52 Overpressure Detection Time

Control mode **VF** **FOCPG FOCPM** Factory defualt: 0.01

Settings 0.0000~ 1.0000 sec

When Pr00-35=0, the overpressure detection is disable.

## 00-36 Detection of disconnection of pressure feedback

Control mode **VF** **FOCPG** **FOCPM** Factory default: 0

Settings 0: No function
1: Enable (only for the pressure feedback output signal within 1~5V and 4~20mA)

When this parameter is set as 1 and if the pressure feedback signal is below 1V or 4mA, an "Pfbf pressure feedback fault” error message may occur.

## 00-38 Pressure/flow control function selection

Control mode **VF** **FOCPG** **FOCPM** Factory default: 0

Settings
Bit 0:
0: Switch the PI Gain according to the pressure feedback level
1: Switch the PI Gain according to the multi-function input terminal
Bit 1:
0: No pressure/flow control switch
1: Switch between the pressure and flow control

When the Bit 0 of this parameter is set as 1, the PI Gain for the pressure can be switched in conjunction with the multi-function input terminal

| Pr. 03-00~03-02 d= 47 | Pr. 03-00~03-02 d= 48 | |
|---|---|---|
| OFF | OFF | PI1(Parameters 00-20 & 00-21) |
| ON | OFF | PI2(Parameters 00-22 & 00-23) |
| OFF | ON | PI3(Parameters 00-24 & 00-25) |

When the Bit 1 of this parameter is set as 1, the pressure feedback is lower than the pressure stable region (please refer to the description of Parameter 00-26) so the flow control will be performed. When it enters the pressure stable region, the pressure control will be performed.

## 00-39 Integration Time – Pressure Overshoot 1

Control mode **VF** **FOCPG** **FOCPM** Factory default : 0.2

Settings 0.00~500.00 seconds

## 00-42 Level of the pressure overshoot

Control mode **VF** **FOCPG** **FOCPM** Factory default : 2

Settings 0~100%

By using the factory setting 250 bar of the Pr00-08 Maximum Pressure Feedback, when the pressure is over 5 bar (250*2%=5 bar), another integral time of Pr00-39 will do overshoot protection.

📖 When Pr00-38=1 and Pr00-39=0, Pr00-42 is disable.

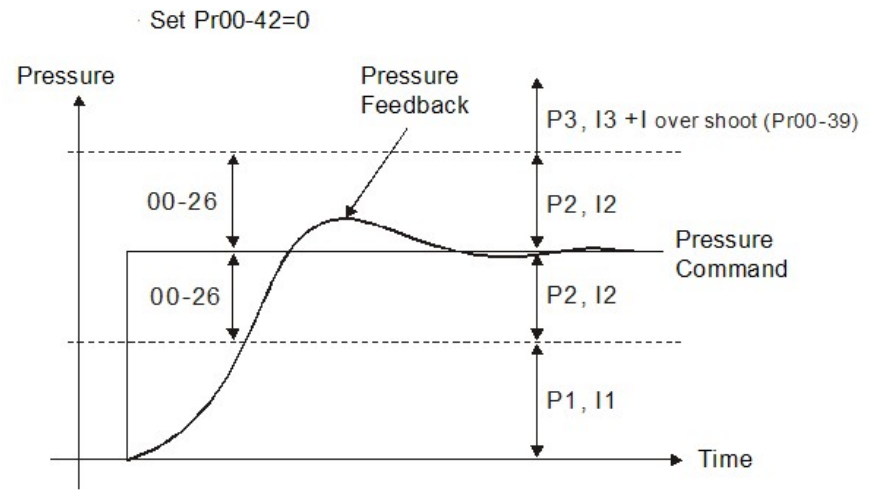


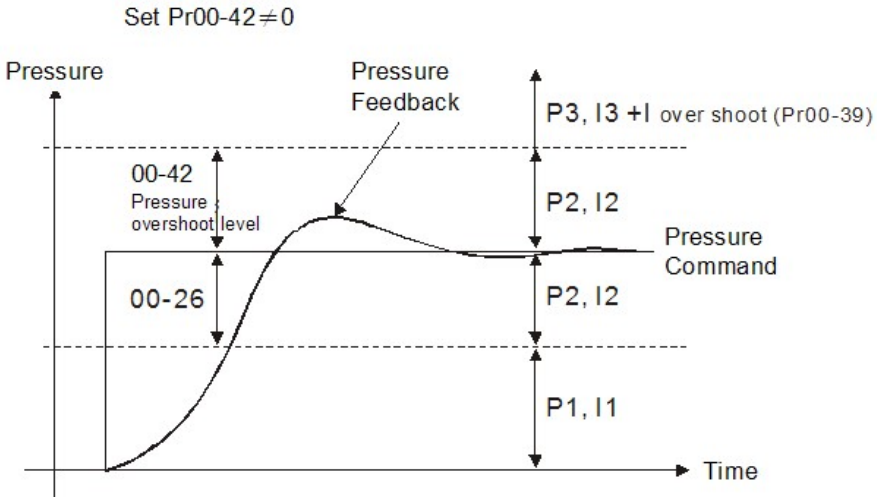


## 00-43 Percentage of the maximum flow

Control mode **VF** **FOCPG** **FOCPM** Factory default : 100

Settings 0~100%

📖 Set up this parameter to adjust the maximum rotation frequency (maximum flow rate). It is not necessary to stop the motor drive to set up this parameter. When this parameter is set to be 100%, it corresponds to the maximum rotation frequency of Pr01-02.

## 00-44 Pressure Command

Control mode **VF** **FOCPG** **FOCPM** Factory default : 0

Settings 0~400bar

## 00-45 Percentage of Flow command

Control mode **VF** **FOCPG** **FOCPM** Factory default: 0

Settings 0~100%

📖 When Pr00-44 ≠ 0, Pressure Command will not be given by the analog signal but input by Pr00-44.

📖 When Pr00-45 ≠ 0, Flow Command will not be given by the analog signal but input by Pr00-45.

📖 Pr00-44 & Pr00-45 can be applied in an environment without input of analog signal to do simple test.

## 00-46 Pressure Command Rising/ Descending S1 curve

Control mode **VF** **FOCPG** **FOCPM** Factory default : 0

Settings 0~1000ms

## 00-47 Pressure Command Rising/ Descending S2 Curve

Control mode **VF** **FOCPG** **FOCPM** Factory default : 0

Settings 0~1000ms

To increase the smoothness at start or stop while increasing or decreasing the percentage of the pressure command. The longer the pressure reference time, the smoother it will be.

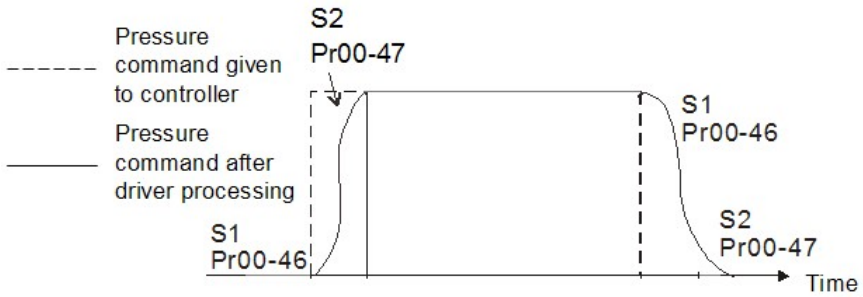


## 00-48 Pressure Command Rising/ Descending S1 Curve

Control mode **VF** **FOCPG** **FOCPM** Factory default : 0

Settings 0~1000ms

## 00-49 Flow Command Rising/.Descending S2 Curve

Control mode **VF** **FOCPG** **FOCPM** Factory default : 0

Settings 0~1000ms

To increase the smoothness at start or stop while increasing or decreasing the percentage of the flow command. The longer the flow reference time, the smoother it will be.

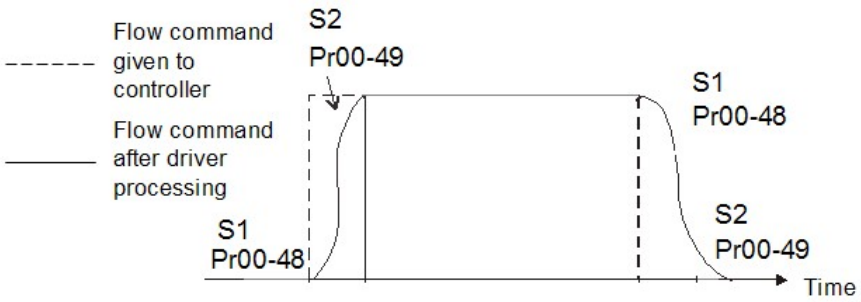

**00-50** Speed bandwidth 2

Control mode **FOCPG FOCPM** Factory default : 20

Settings 0 ~ 40Hz

**00-51** Speed bandwidth 3

Control mode **FOCPG FOCPM** Factory default : 20

Settings 0 ~ 40Hz

- To set up the response speed, the larger the value, the faster the reponse.

**00-53** Oil shortage detection time

Control mode **VF** **FOCPG FOCPM** Factory default : 0.0

Settings 0.0 ~60.0 sec

- When the actual pressure is lower than the minimum pressure (Pr00-27) and exceeds the time set at Pr00-53, an oil shortage warning will pop up on the keypad.
- This parameter is functional only when Pr00-09 (Pressure control mode) =1.
- When this parameter is set to 0, it is diabled.

**00-54** Oil pump running reversely detection time

Control mode **VF** **FOCPG FOCPM** Factory default : 0.0

Settings 0.0 ~60.0 sec

- When the oil pump runs reversely and exceeds the time set at Pr00-54, a reverse running pops up.
- When this parameter is set to 0, it is disabled.

**00-55** ~ **00-58** Reserved

# 01 Motor Parameters

✓You can set this parameter during operation.

## 01-00 Control mode

Control mode **VF** **FOCPG** **FOCPM** Factory default: 5

Settings
0：V/F
1: Reserved
2: Reserved
3: FOCPG
4: Reserved
5: FOCPM
6: Reserved

This parameter determines the control mode of this AC motor.

0: V/F control, the user can design the required V/F ratio. It is used for induction motors.
1: Reserved
2: Reserved
3: FOC vector control + Encoder. It is used for induction motors.
4: Reserved
5: FOC vector control + Encoder. It is used for synchronous motors.
When the control mode is FOCPM (Pr01-00=5), Pr00-06 will follow the setting at Pr01-20 <Number of poles of the synchronous motor> to modify Pr01-02<Motor's maximum operating frequency>. Frequency = rpm*Pole/120

6: Reserved

## ✓ 01-01 Source of operation command

Control mode **VF** **FOCPG** **FOCPM** Factory default: 1

Settings
0: The operation command is controlled by the digital keypad
1: The operation command is controlled by the external terminals. The STOP button on the keypad panel is disabled
2: The operation command is controlled by RS4845. The STOP button on the keypad panel is disabled

For the operation command, press the PU button to allow the "PU" indicator to be lit. In this case, the RUN, JOG, and STOP button are enabled.

## 01-02 Motor's maximum operating frequency

Control mode **VF** **FOCPG** **FOCPM** Factory default: 166.67

Settings 50.00~600.00Hz

Set the maximum operation frequency range of the motor. This setting is corresponding to the maximum flow for the system.

When the control mode is FOCPM (Pr01-00=5), Pr00-06 will follow the setting at Pr01-20 <Number of poles of the synchronous motor> to modify Pr01-02<Motor's maximum operating frequency>. frequency = rpm*Pole/120

## 01-03 Motor's rated frequency

Control mode **VF** **FOCPG** **FOCPM** Factory default: 113.33

Settings 0.00~600.00Hz

Typically, this setting is configured according to the rated voltage and frequency listed in the specifications on the motor's nameplate. If the motor is intended for 60Hz, set this value as 60Hz; if the motor is intended for 50Hz, set this value as 50Hz.

The motor's rated frequency will be different as Rated speed of the synchronous motor

(Pr01-19) and Number of poles of the synchronous motor (Pr.01-20) change.

## 01-04 Motor's rated voltage

Control mode **VF** **FOCPG** Factory default: 220.0/440.0

Settings 230V series: 0.1~255.0V
460V series: 0.1~510.0V

Typically, this setting is configured according to the rated operation voltage shown on the motor's nameplate. If the motor is intended for 220V, set this value as 220.0V; if the motor is intended for 200V, set this value as 200.0V.

## 01-05 Acceleration time setting

Control mode **VF** **FOCPG** **FOCPM** Factory default: 0.00

Settings 0.00~600.00 seconds

## 01-06 Deceleration time setting

Control mode **VF** **FOCPG** **FOCPM** Factory default: 0.00

Settings 0.00~600.00 seconds

The acceleration time determines the time required for the Hybrid servo motor to accelerate from 0.0Hz to [the motor's maximum frequency] (Pr01-02). The deceleration time determines the time required for the Hybrid servo motor to decelerate from [the motor's maximum frequency] (Pr01-02) to 0.0Hz.

When the control mode is FOCPM (Pr01-00=5), Pr00-06 will follow the setting at Pr01-20 <Number of poles of the synchronous motor> to modify Pr01-02<Motor's maximum operating frequency>. frequency = rpm*Pole/120

## 01-07 Motor Parameter Auto Tuning

Factory default: 0

| Settings / Control mode | VF | FOCPG | FOCPM |
|---|---|---|---|
| 0: No function | ○ | ○ | |
| 1: Rolling test for induction motor(IM) (Rs, Rr, Lm, Lx, no-load current) | ○ | ○ | |
| 2: Static test for induction motor(IM) | ○ | ○ | |
| 3: Reserved | | | |
| 4: Auto measure the angle between magnetic pole and PG origin | | | ○ |
| 5: Rolling test for PM motor | | | ○ |

If the parameter is set as 1~2, it will perform the parameter automatic tuning for the Induction motor. In this case, press the [Run] button to perform the automatic measurement operation immediately. After the measurement is complete, the values are filled into Parameters 01-13~16 (no-load current, Rs, Rr, Lm, and Lx), respectively.

Induction motor *AUTO-Tuning procedure:* (Rolling test)

1. All parameters of the Hybrid Servo Controller are set to factory settings and the motor is connected correctly.
2. Users are strongly advised to disconnect the motor from any load before tuning. That is to say, the motor contains only the output shaft and connects to neither a belt nor a decelerator. Otherwise, it will be impossible to disconnect the motor from any loads. Static tuning is advised.
3. Set the rated voltage 01-04, rated frequency 01-03, rated current 01-08, rated power 01-09, rated speed 01-10, and number of poles 01-11 of the motor with correct values, respectively. For the acceleration/deceleration time, please set the correct values.

4. Set Pr01-07 as 1 and then press the RUN button on the keypad. The auto tuning process for the motor is carried out immediately. (Note: the motor starts running).
5. After the process is finished, check if the motor's parameters (Pr01-13 ~Pr01-16) have been automatically entered with the measurement data.
6. Equivalent circuit of the motor

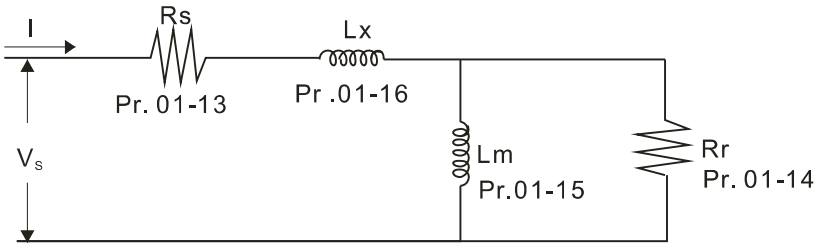


Motor equivalent circuit used by VJ

**NOTE**

* When the static tuning (Pr01-07 = 2) is used, you must enter the no-load current to the motor. It is generally 20 to 50% of the rated current.

If the parameter is set as 5, it will perform the parameter automatic tuning for the synchronous motor. In this case, press the [Run] button to perform the automatic measurement operation immediately. After the measurement is complete, the values are filled into Parameters 01-22 (Rs), 01-23 & 24 (Ld & Lq), 01-25 (Back EMF of the synchronous motor), respectively.

Synchronous motor *AUTO-Tuning procedure:* (static measurement)

1. All parameters of the Hybrid Servo Controller are set to factory settings and the motor is connected correctly.
2. Set the rated current 01-17, rated power 01-18, rated speed 01-19, and number of poles 01-20 of the motor with correct values, respectively. For the acceleration/deceleration time, set the values according to the motor's capacity.
3. Set Parameter 01-07 as 5 and then press the RUN button. The auto tuning process for the motor is carried out immediately. (Note: the motor starts running slightly).
4. After the process is finished, check if the motor's parameters (parameters 01-22 ~ 01-25) have been automatically entered with the measurement data.

If the Parameter is set as 4, the automatic measurement of the angle between magnetic pole and the PG origin for the synchronous motor is performed. In this case, press the [Run] button to immediately perform automatic measurement. The measured data will be entered into Parameter 01 -27.

Auto-Tuning process for Synchronous Motor of the Angle between Magnetic Poles and PG Origin:

1. Set Pr01-07 as 5 <Rolling test for PM motor> and run this setting. Or input the correct vales to Pr01-03, Pr01-17 to Pr01-25.
2. Before tuning, it is recommended to separate the motor and the load.
3. Set Pr01-07 as 4 and then press the RUN button on the keypad. The auto tuning process for the motor is carried out immediately. (Note: the motor starts running).
4. After the process is complete, check if the values for the angle between magnetic poles and PG origin have been automatically entered in Pr01-27.

## 01-08 Rated current of the induction motor (A)

Control mode **FOCPG**

Unit: Ampere
Factory default: #.##

Settings 40~120% of the rated driving current

To set this parameter, the user can set the rated motor current range shown on the motor's nameplate. The factory default is 90% of the rated current of the Hybrid Servo Controller.

For example: For the 7.5HP (5.5kW) motor, the rated current is 25, the factory settings: 22.5A. The customers can set the parameter within the range 10 ~ 30A.
25*40%=10 25*120%=30

## 01-09 Rated power of the induction motor

Control mode **FOCPG**

Factory default: #.##

Settings 0 – 655.35kW

Set the motor's rated power. The factory default value is the power of the Hybrid Servo Controller.

## 01-10 Rated speed of the induction motor

Control mode **FOCPG**

Factory default:
1710 (60Hz 4-pole)
1410 (50Hz 4-pole)

Settings 0~65535

This parameter sets the rated speed of the motor. It is necessary to refer to the specifications shown on the motor's nameplate.

## 01-11 Number of poles of the induction motor

Control mode **FOCPG**

Factory default: 4

Settings 2~20

This parameter sets the number of motor number of poles (odd number is not allowed).

## 01-12 No-load current of the induction motor (A)

Control mode **FOCPG**

Unit: Ampere
Factory default: 40

Settings 0~ Default value of Parameter 01-08

The factory default is 40% of the rated current of the Hybrid Servo Controller.

## 01-13 Stator resistance (Rs) of the induction motor

Control mode **FOCPG**

Factory default: #.##

## 01-14 Rotor resistance (Rr) of the induction motor

Control mode **FOCPG**

Factory default: #.##

Settings 0~65.535Ω

## 01-15 Magnetizing inductance (Lm) of the induction motor

Control mode **FOCPG**

Factory default: #.##

## 01-16 Total leakage inductance (Lx) of the induction motor

Control mode **FOCPG**

Factory default: #.##

Settings 0.0~6553.5mH

## 01-17 Rated current of the synchronous motor

Control mode **FOCPM**

Factory default: 0.00

Settings 0~655.35 Amps

The user can set the rated current shown on the synchronous motor's nameplate.

## 01-18 Rated power of the synchronous motor

Control mode **FOCPM** Factory default: 0.00

Settings 0.00 – 655.35kW

This Parameter sets the rated power of the synchronous motor.

## 01-19 Rated speed of the synchronous motor

Control mode **FOCPM** Factory default: 1700

Settings 0~65535

This parameter sets the rated speed of the synchronous motor. It is necessary to refer to the specifications shown on the motor's nameplate.

## 01-20 Number of poles of the synchronous motor

Control mode **FOCPM** Factory default: 8

Settings 2~20

This parameter sets the number of the synchronous motor's number of poles (odd number is not allowed).

## 01-21 Inertia of the synchronous motor's rotor

Control mode **FOCPM** Factory default: 0.0

Settings 0.0~6553.5 $*10^{-4}$ kg.m2

## 01-22 Stator's phase resistance (Rs) oth the synchronous motor

Control mode **FOCPM** Factory default: 0

Settings 0~65.535Ω

Enter the phase resistance of the synchronous motor.

## 01-23 stator's phase inductance(Ld) of the synchronous motor
## 01-24 stator's phase inductance(Lq) of the synchronous motor

Control mode **FOCPM** Factory default: 0.00

Settings 0.0~655.35mH

Enter the synchronous motor's phase inductance. For surface type magnets (SPM), Ld = Lq; for built-in magnets (IPM), Ld ≠ Lq.

## 01-25 Back EMF of the synchronous motor

Control mode **FOCPM** Factory default: 0

Settings 0~65535 V/krpm

Enter the back EMF of the synchronous motor.

## 01-26 Encoder type selection

Control mode **FOCPM** Factory default: 3

Settings
0: ABZ
1: ABZ+HALL (only used for Delta's servo motors)
2: ABZ+HALL
3: Resolver

Look up table for Encoders & PG cards

| Parameter Setting | Encoder Type | Applicable PG Card |
|---|---|---|
| 01-26=0 | A, B, Z | EMVJ-PG01U |
| 01-26=1,2 | A, B, Z+U, V, W | EMVJ-PG01U |
| 01-26=3 | Resolver | EMVJ-PG01/02R |

## 01-27 PG Offset angle of synchronous motor

Control mode **FOCPM** Factory default: 0.0

Settings 0.0～360.0°

📖 Offset angle of the PG origin for the synchronous motor.

## 01-28 Number of poles of the resolver

Control mode **FOCPM** Factory default: 1

Settings 1~5

## 01-29 Encoder Pulse

Control mode **FOCPG** **FOCPM** Factory default: 1024

Settings 1~20000

📖 This parameter can be set the encoder's number of pulses per revolution (PPR).

## 01-30 Encoder's input type setting

Control mode **FOCPG** **FOCPM** Factory default: 1

Settings 0: No function

1: Phase A leads in a forward run command and phase B leads in a reverse run command.

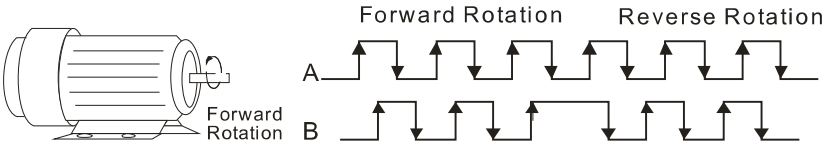


2: Phase B leads in a forward run command and phase A leads in a reverse run command.

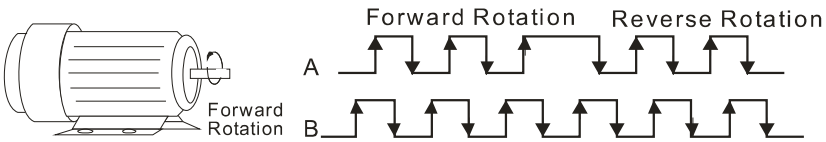


3: Phase A is a pulse input and phase B is a direction input. (low input=reverse direction, high input=forward direction).

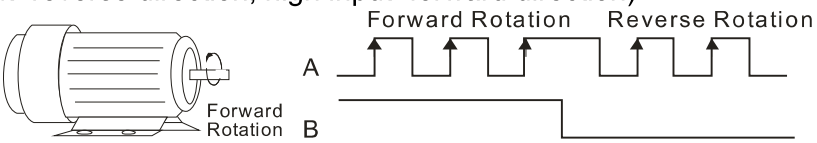


4: Phase A is a pulse input and phase B is a direction input. (low input=forward direction, high input=reverse direction).

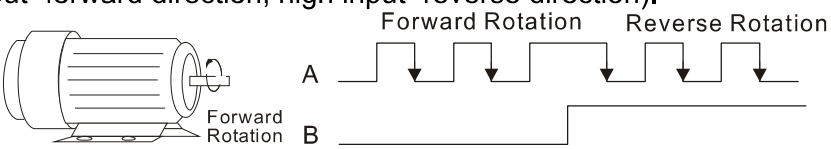


5: Single-phase input

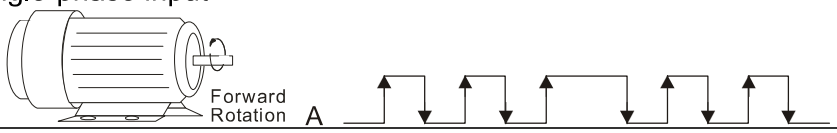


📖 Enter the correct setting for the pulse type is helpful in controlling the stability.

## 01-31 System control

Control mode **FOCPG** **FOCPM** Factory default: 1

Settings 0: No function

1: ASR automatic tuning

2: Estimation of inertia

📖 If the setting value is 1: The speed control gain is determined by Parameters 00-10

If the setting value is 2: The system inertia is estimated. Please refer to descriptions in Chapter 3

## 01-32 Unity value of the system inertia

Control mode FOCPG FOCPM Factory default: 260

Settings 1~65535 (256 = 1 per unit)

## 01-33 Carrier frequency

Control mode FOCPG FOCPM Factory default: 5

Settings 5 kHz; 10kHz

- When this parameter is configured, please re-start the Hybrid Servo Controller.
- The carrier frequency of the PWM output has a significant influence on the electromagnetic noise of the motor. The heat dissipation of the Hybrid Servo Controller and the interference from the environment may also affect the noise. Therefore, if the ambient noise is greater than the motor noise, reducing the carrier frequency of the drive may have the benefits of reducing a temperature rise; if the carrier frequency is high, even if a quiet operation is obtained, the overall wiring and interference control should be taken into consideration.

## 01-34 Reserved

## 01-35 Motor ID

Control mode FOCPG FOCPM Factory default: 0

Settings

| | Delta Hybrid Servo Motor ID | |
|---|---|---|
| 0 | Disabled | |
| 16 | ECMA-ER181BP3 | 11kW220V motor |
| 17 | ECMA-KR181BP3 | 11kW380V motor |
| 18 | ECMA-ER221FPS | 15kW220V motor |
| 19 | ECMA-KR221FPS | 15kW380V motor |
| 20 | ECMA-ER222APS | 20kW220V motor |
| 21 | ECMA-ER222APS | 20kW380V motor |
| 125 | MSJ-KR133AE48B | 30kW380V motor |
| 216 | MSJ-DR201AE42C | 10.4kW220V motor |
| 217 | MSJ-IR201AE42C | 10.3kW380V motor |
| 218 | MSJ-DR201EE43C | 14.6kW380V motor |
| 219 | MSJ-IR201EE42C | 14.2kW380V motor |
| 220 | MSJ-DR201IE42C | 18.4kW220V motor |
| 221 | MSJ-IR201IE42C | 18.3kW380V motor |
| 222 | MSJ-GR202DE42C | 23.1kW220V motor |
| 223 | MSJ-OR202DE42C | 23kW380V motor |
| 224 | MSJ-DR202HE42C | 27.6kW220V motor |
| 225 | MSJ-LR202FE42C | 25kW380V motor |
| 227 | MSJ-IR203CE42C | 32kW/380V motor |
| 229 | MSJ-OR264FE48C | 45.2kW380V motor |
| 231 | MSJ-IR265CE48C | 52.5kW380V motor |
| 233 | MSJ-IR266IE48 | 68kW, 380V motor |
| 245 | MSJ-IR202HE42 | 27kW, 380V motor |

## 01-36 Change the rotation direction

Control mode **FOCPG** **FOCPM** Factory default: 0

Settings
0: When the driver runs forward, the motor rotates counterclockwise. When the driver runs reverse, the motor rotates clockwise.
1: When the driver runs forward, the motor rotates clockwise. When the driver runs reverse, the motor rotates counterclockwise.

This parameter can be modified only when the machine is shut down. For an induction motor after the parameters are configured completely, it will change the running direction. For a synchronous motor, it is necessary to perform the magnetic pole detection and re-start the drive.

When applying Pr01-36 on a synchronous motor, the motor drives which use firmware v2.04(included) and earlier version needs to have its magnetic pole redetected and be rebooted. But the motor drives which use firmware v2.05 (included) and later version don't need to have its magnetic pole redetected or be rebooted.

## 01-37 HES ID#

Control mode **FOCPG** **FOCPM** Factory default: 0

Settings 0 : Disabled

| Model | HES ID# |
|---|---|
| - | - |
| - | - |
| HES063H23C | 2122 |
| HES080H23C | 3122 |
| HES100H23C | 4122 |
| HES125H23C | 5122 |
| HES160H23C | 6122 |
| HES200H23C | 7122 |
| HES250G23C | 8022 |
| HES063H23A | 2120 |
| HES080G23A | 3020 |
| HES080H23A | 3120 |
| HES100G23A | 4020 |
| HES100H23A | 4120 |
| HES100Z23A | 4220 |
| HES125G23A | 5020 |
| HES125H23A | 5120 |
| HES160G23A | 6020 |
| HES160H23A | 6120 |
| HES200G23A | 7020 |

| Model | HES ID# |
|---|---|
| - | - |
| HES063G43A | 2040 |
| HES063H43A | 2140 |
| HES080G43A | 3040 |
| HES080H43A | 3140 |
| HES100G43A | 4040 |
| HES100H43A | 4140 |
| HES100Z43A | 4240 |
| HES125G43A | 5040 |
| HES125H43A | 5140 |
| HES160G43A | 6040 |
| HES160H43A | 6140 |
| HES200G43A | 7040 |

| Model | HES ID# |
|---|---|
| HES063H43C | 2142 |
| HES080H43C | 3142 |
| HES100H43C | 4142 |
| HES125H43C | 5142 |
| HES160H43C | 6142 |
| HES063M43C | 2342 |
| HES080M43C | 3342 |
| HES100M43C | 4342 |
| HES125M43C | 5342 |
| HES160M43C | 6342 |
| HES200M43C | 7342 |
| HES200H43C | 7142 |
| HES250M43C | 8342 |
| HES320M43C | 9342 |

## 01-38 Flux-Weakening Voltage Level

Control mode **FOCPG FOCPM** Factory default: 10V

Settings 0 ~100V

- The function of Pr01-38 is to adjust the flux-weakening voltage level.
- Adjust this parameter to use the voltage to lower the motor's current when necessary. If you make the current too low, there's a current distortion.
- The maximum DC BUS output voltage is the highest setting value of Pr01-38.

# 02 Parameters for Protection

✓You can set this parameter during operation.

## ✓ 02-08 Software brake level

Control mode: VF, FOCPG, FOCPM

Factory default: 380.0/760.0

Settings: 230V series: 350.0~450.0Vdc
460V series: 700.0~900.0Vdc

📖 Sets the reference point of software brake. The reference value is the DC bus voltage.

## 02-01 Present fault record
## 02-02 Second most recent fault record
## 02-03 Third most recent fault record
## 02-04 Fourth most recent fault record
## 02-05 Fifth most recent fault record
## 02-06 Sixth most recent fault record

| Settings Control mode | VF | FOCPG | FOCPM |
|---|---|---|---|
| 0: No error record | ○ | ○ | ○ |
| 1: Over-current during acceleration (ocA) | ○ | ○ | ○ |
| 2: Over-current during deceleration (ocd) | ○ | ○ | ○ |
| 3: Over-current during constant speed (ocn) | ○ | ○ | ○ |
| 4: Ground fault (GFF) | ○ | ○ | ○ |
| 5: IGBT short-circuit (occ) | ○ | ○ | ○ |
| 6: Over-current at stop (ocS) | ○ | ○ | ○ |
| 7: Over-voltage during acceleration (ovA) | ○ | ○ | ○ |
| 8: Over-voltage during deceleration (ovd) | ○ | ○ | ○ |
| 9: Over-voltage during constant speed (ovn) | ○ | ○ | ○ |
| 10: Over-voltage at stop (ovS) | ○ | ○ | ○ |
| 11: Low-voltage during acceleration (LvA) | ○ | ○ | ○ |
| 12: Low-voltage during deceleration (Lvd) | ○ | ○ | ○ |
| 13: Low-voltage during constant speed (Lvn) | ○ | ○ | ○ |
| 14: Low-voltage at stop (LvS) | ○ | ○ | ○ |
| 15: Phase loss protection (PHL) | ○ | ○ | ○ |
| 16: IGBT over-heat (oH1) | ○ | ○ | ○ |
| 17: Heat sink over-heat for 40HP and above (oH2) | ○ | ○ | ○ |
| 18: TH1 open: IGBT over-heat protection circuit error (tH1o) | ○ | ○ | ○ |
| 19: TH2 open: heat sink over-heat protection circuit error (tH2o) | ○ | ○ | ○ |
| 20: IGBT over heated and unusual fan function (oHF) | ○ | ○ | ○ |
| 21: Hybrid Servo Controller overload (oL) | ○ | ○ | ○ |
| 22: Motor 1 overload (EoL1) | ○ | ○ | ○ |
| 23: Reserved | | | |
| 24: Motor over-heat, detect by PTC (oH3) | ○ | ○ | ○ |
| 25: Reserved | | | |
| 26: Over-torque 1 (ot1) | ○ | ○ | ○ |
| 27: Over-torque 2 (ot2) | ○ | ○ | ○ |
| 28: Reserved | | | |
| 29: Reserved | | | |
| 30: Memory write error (cF1) | ○ | ○ | ○ |
| 31: Memory read error (cF2) | ○ | ○ | ○ |
| 32: Isum current detection error (cd0) | ○ | ○ | ○ |
| 33: U-phase current detection error (cd1) | ○ | ○ | ○ |
| 34: V-phase current detection error (cd2) | ○ | ○ | ○ |
| 35: W-phase current detection error (cd3) | ○ | ○ | ○ |
| 36: Clamp current detection error (Hd0) | ○ | ○ | ○ |
| 37: Over-current detection error (Hd1) | ○ | ○ | ○ |
| 38: Over-voltage current detection error (Hd2) | ○ | ○ | ○ |
| 39: Ground current detection error (Hd3) | ○ | ○ | ○ |
| 40: Auto tuning error (AuE) | | | ○ |

| | | | |
|---|---|---|---|
| 41: Reserved | ○ | ○ | ○ |
| 42: PG feedback error (PGF1) | | ○ | ○ |
| 43: PG feedback loss (PGF2) | | ○ | ○ |
| 44: PG feedback stall (PGF3) | | ○ | ○ |
| 45: PG feedback slip (PGF4) | | ○ | ○ |
| 46: Reserved | ○ | ○ | ○ |
| 47: Reserved | ○ | ○ | ○ |
| 48: Reserved | | | |
| 49: External fault input (EF) | ○ | ○ | ○ |
| 50: Emergency stop (EF1) | ○ | ○ | ○ |
| 51: Reserved | | | |
| 52: Password error (PcodE) | ○ | ○ | ○ |
| 53: Reserved | | | |
| 54: Communication error (cE1) | ○ | ○ | ○ |
| 55: Communication error (cE2) | ○ | ○ | ○ |
| 56: Communication error (cE3) | ○ | ○ | ○ |
| 57: Communication error (cE4) | ○ | ○ | ○ |
| 58: Communication time out (cE10) | ○ | ○ | ○ |
| 59: PU time out (cP10) | ○ | ○ | ○ |
| 60: Braking transistor error (bF) | ○ | ○ | ○ |
| 61~63: Reserved | ○ | ○ | ○ |
| 64: Safety relay Error (SRY) | ○ | ○ | ○ |
| 65: PG card information error (PGF5) | | | ○ |
| 66: Over pressure (ovP) | ○ | ○ | ○ |
| 67: Pressure feedback fault (PfbF) | ○ | ○ | ○ |

As a fault occurs and the machine is forced shutting down, the event will be recorded. During shutting down, the LvS is not recorded.

## 02-07 Low voltage level

Control mode **VF** **FOCPG** **FOCPM** Factory default: 180/360

Settings 230V Series: 160 – 220V
460V Series: 320 – 440V

This parameter is used to set the LV discrimination level.

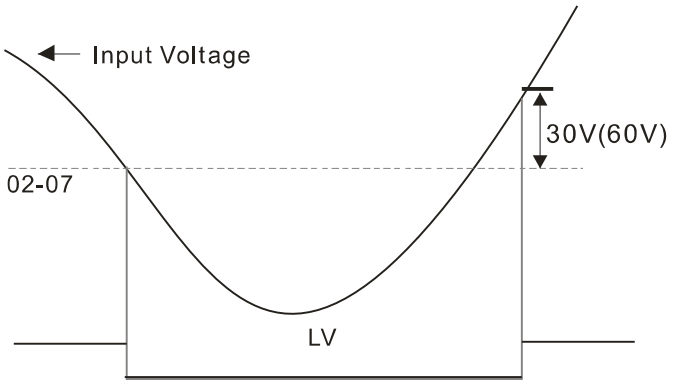


## 02-08 PTC action selection

Control mode **VF** **FOCPG** **FOCPM** Factory default: 1

Settings 0: Warn and keep operation
1: Warn and ramp to stop
2: Warn and coast to stop

Parameter 02-08 is used to define the operation mode of the drive after the PTC is activated.

## 02-09 PTC level

Control mode **VF** **FOCPG** **FOCPM** Factory default: 50.0

Settings 0.0~150.0%
0.0~150.0°C

This parameter defines the maximum value of the analog input for 100% of the activation level of the PTC.

## 02-10 PTC detection filtering time

Control mode VF FOCPG FOCPM

Factory default: 0.20

Settings 0.00 – 10.00 seconds

## 02-11 PTC type

Control mode VF FOCPG FOCPM

Factory default: 0

Settings 0: Not assigned
1: KTY84

When this parameter is set as 1, the unit for Pr02-09 and 02-12 will be changed from % to °C.

When this parameter is set as 1, the default setting of Pr02-09 will change from 50% to 140°C.

There are two types of temperature rising protection: KTY84 and PTC.
When you use one of them, wrap the final wires of another type to avoid short-circuiting by touching the wires.

1) When you use KTY84:
Connect the Red/White wire to the AUI connector of I/O terminal on the control board.
Then connect the Black/ White wire to the ACM connector.
And then switch Jumper (J7) to the position of KTY84

2) When you use PTC:
Connect the Yellow wire on encoder to the AUI connector of I/O terminal on the control board.
Then connect the Yellow/Black wire to the ACM connector. 。
And then switch the Jumper(J7) to the position of OFF
The temperature rising protection by PTC needs to go with the setting at Pr02-11 =0 and Pr02-09 PTC level = 62.5%.

(This is a trip-out protection when the motor reaches 130°C)

## 02-12 Motor fan activation level

Control mode VF FOCPG FOCPM

Factory default: 50.0

Settings 0.0~100.0%
0.0~150.0°C

When the Parameters 03-05 to 03-07 for the multi-function output terminal are set to 45, the motor fan will start or stop according to this parameter setting.

## 02-13 Electronic thermal relay selection 1

Control mode VF FOCPG FOCPM

Factory default: 2

Settings 0: Inverter motor
1: Standard motor
2: Disable

## 02-14 Electronic thermal characteristic for motor

Control mode VF FOCPG FOCPM

Factory default: 60.0

Settings 30.0~600.0 seconds

To prevent self-cooled motor from over heating at low speed operation, the user can set the electronic thermal relay to limit the allowed output power of the Hybrid Servo Controller.

### 02-15 Output frequency at malfunction

Control mode **VF** **FOCPG** **FOCPM** Factory default: Read only

Settings 0.00~655.35Hz

### 02-16 Output voltage at malfunction

Control mode **VF** **FOCPG** **FOCPM** Factory default: Read only

Settings 0.0~6553.5V

### 02-17 DC side voltage at malfunction

Control mode **VF** **FOCPG** **FOCPM** Factory default: Read only

Settings 0.0~6553.5V

### 02-18 Output current at malfunction

Control mode **VF** **FOCPG** **FOCPM** Factory default: Read only

Settings 0.00~655.35Amp

### 02-19 IGBT temperature at malfunction

Control mode **VF** **FOCPG** **FOCPM** Factory default: Read only

Settings 0.0~6553.5□

### 02-20 Auto-reset LvX error

Control mode VF **FOCPG** **FOCPM** Factory setting: 0

Settings 0: Disable
1: Enable

- When this parameter is enabled and when there is RUN signal, the hybrid servo drive will automatically restart after repowering on.

### 02-21 Decode the parameter protection with the password

Control mode Factory setting: 0

Settings 1~9998
Display 0~3 times of entering wrong password

- Enter the password set at Pr02-21 into Pr02-22 to unlock the parameters to make modifications.
- Write down the setting value after you set up this parameter to avoid inconveniences.
- Use Pr02-21 and Pr02-22 to prevent any unauthorized personnel to modify/ delete parameters.
- If you forget the password, input 9999 and press ENTER, then repeat inputting 9999 and pressing ENTER to complete the decoding procedure (This procedure has to be done in 10 seconds, if you don't finish that in 10 seconds, repeat the same procedure until you finish the procedure in 10 sec.). Once you finish this decoding process, all the parameters will be back to the factory settings.
- When setting up a password, all the parameters will be read as 0, except Pr02-22.

### 02-22 Set up a parameter protection password

Control mode Factory setting: 0

Settings 1~ 9998, 10000~65535
Display 0: No password set or password entered successfully in Pr02-30.
1: Parameters are locked

- This parameter is for setting up a password to protect parameters. When you finish setting up a password, keypad will display 1, which means the password protection is now effective.
- Once you input the correct password into Pr02-21, the hybrid servo drive is temporarily unlocked. To cancel the parameter protection, set Pr02-22 =0. Once the parameter protection is cancelled, the hybrid servo drive is without password protection even after reboot.

Decode temporarily or cancel the password then you will be able to use keypad to copy parameters. But the password set at Pr02-22 will not be copied. When the parameters saved in the keypad are transferred to the hybrid servo drive, you will need to set up a password at Pr02-22 to enable parameter protection.

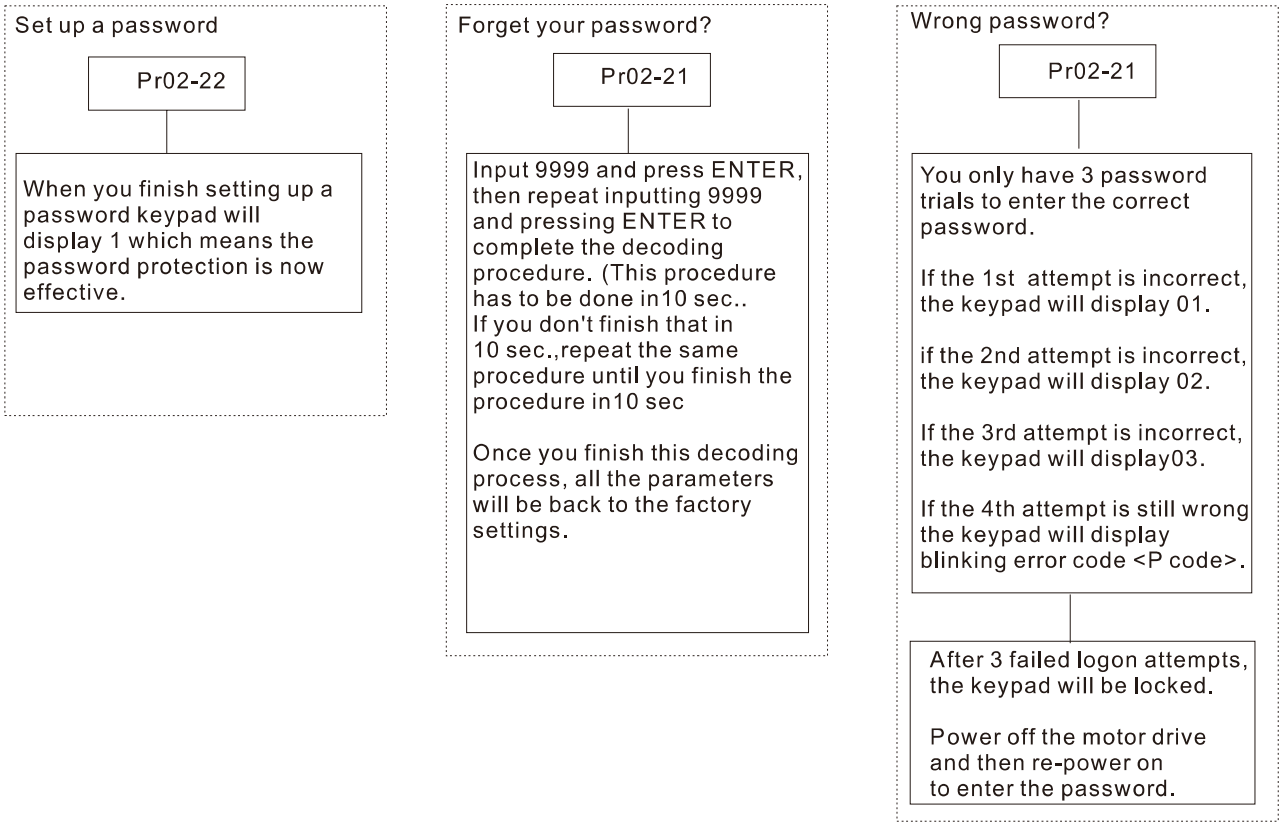


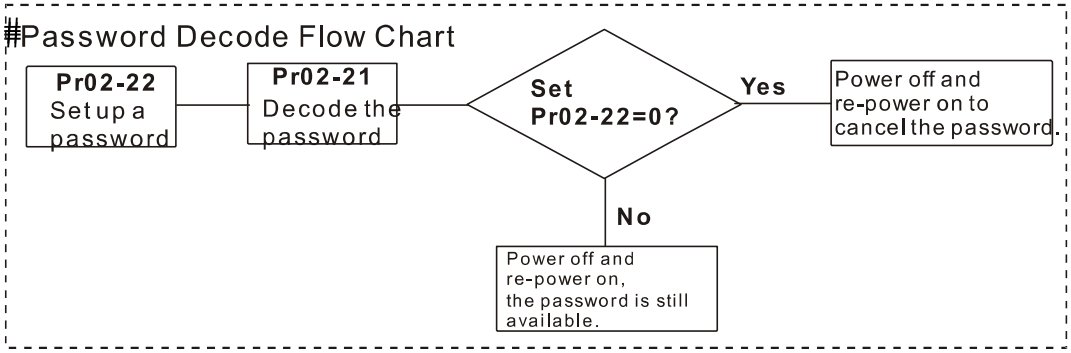


## 02-23 ~ 02-30 Reserved

# 03 Digital/Analog Input/Output Parameters

✓ You can set this parameter during operation.

## 03-00 Multi-function input command 3 (MI3)
## 03-01 Multi-function input command 4 (MI4)
## 03-02 Multi-function input command 5 (MI5)

Control mode **VF** **FOCPG** **FOCPM** Factory default: 0

Settings
0: No function
44: Injection signal input
45: Confluence/Diversion signal input
46: Reserved
47: Multi-level pressure PI command 1
48: Multi-level pressure PI command 2
51: flow command

📖 When the value of this parameter is set as 44, the pressure feedback is lower than the pressure stable region (please refer to the description of Parameter 00-26) so the flow control will be performed. When it enters the pressure stable region, the pressure control will be performed.

📖 If the setting value is 45, the confluence (OFF)/diversion (ON) function will be performed. For detailed operation, please refer to Chapter 2 for wiring and Chapter 3 for tuning.

📖 Please refer to the description Parameters 00-36 if the setting value is 47 and 48,

📖 When under the pressure control (Pr00-09=1) and the external terminal is ON, the speed command is the flow command. It is no longer necessary to learn what the flow command is through the calculation of PI pressure.

## ✓ 03-03 Digital input response time

Control mode **VF** **FOCPG** **FOCPM** Factory default: 0.005

Settings 0.001~30.000 sec

📖 This parameter is used to delay and confirm the signal on the digital input terminal.

## ✓ 03-04 Digital input operation direction

Control mode **VF** **FOCPG** **FOCPM** Factory default: 0

Settings 0~65535

📖 This parameter defines the activation level of the input signal.

📖 Bit 0 for the SON terminal, bit 2 for the EMG terminal, bit 3 for the RES terminal, bits 4~6 correspond to MI3~MI5, respectively.

## ✓ 03-05 Multi-function output 1 (Relay 1)

Control mode **VF** **FOCPG** **FOCPM** Factory default: 11

## ✓ 03-06 Multi-function Output 2 (MOI)

Control mode **VF** **FOCPG** **FOCPM** Factory default: 0

## ✓ 03-07 Multi-function Output 3 (MO2)

Control mode **VF** **FOCPG** **FOCPM** Factory default: 0

Settings
0: No function
1: Operation indication
9: Hybrid Servo Controller is ready
11: Error indication
14: MO1 software brake output
44: Displacement switch signal
45: Motor fan control signal

## 03-08 Multi-function output direction

| Control mode | VF | FOCPG | FOCPM | Factory default: 0 |
|---|---|---|---|---|
| Settings | 0~65535 | | | |

This parameter is used for bit-wise setting. If the corresponding bit is 1, the multi-function output is set as reverse direction.

## 03-09 Low-pass filtering time of keypad display

| Control mode | VF | FOCPG | FOCPM | Factory default: 0.100 |
|---|---|---|---|---|
| Settings | 0.001~65.535 seconds | | | |

This parameter can be set to reduce the fluctuation of the readings on the keypad.

## 03-10 Maximum output voltage for pressure feedback

| Control mode | VF | FOCPG | FOCPM | Factory default: 10.0 |
|---|---|---|---|---|
| Settings | 5.0~10.0 V | | | |

## 03-11 Minimum output voltage for pressure feedback

| Control mode | VF | FOCPG | FOCPM | Factory default: 0.0 |
|---|---|---|---|---|
| Settings | 0.0~2.0V | | | |

This parameter defines the pressure feedback output voltage type.

If the pressure feedback has a bias, can adjust this parameter to eliminate the bias.

## 03-12 Type of Pressure Feedback Selection

| Control mode | VF | FOCPG | FOCPM | Factory default: 1 |
|---|---|---|---|---|
| Settings | 0: Current<br>1: Voltage | | | |

PO (Pressure Feedback) terminal: Add a current-fed pressure feedback (4~20mA)

The following are required when using it:
Switch the SW100 on the I/O board to “I”.
Set Pr03-12 = 0 (4~20mA)
Set Pr00-36 =1 (Enable detection of the pressure feedback disconnection)

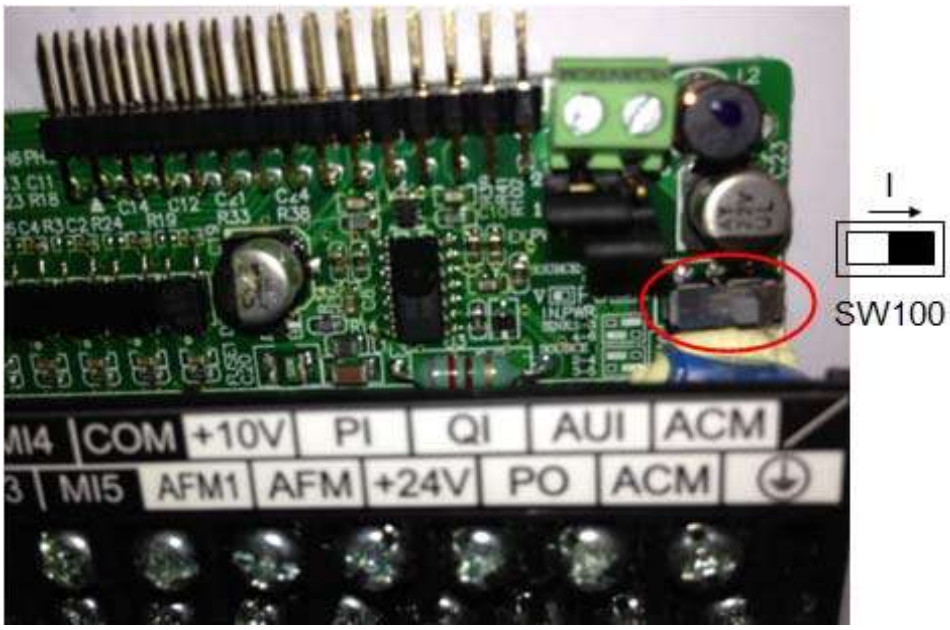

## 03-13 Confluence Master/Slave Selection

Control mode **VF** **FOCPG** **FOCPM** Factory default: 0

Settings 0: No function
1: Master 1
2: Slave/Master 2
3: Slave/Master 3

- In a stand-alone system, this parameter is set as 0
- In a confluence system, the parameter is set as 1 for the Master and 2 for the Slave
- With multi-function input terminal function 45, the confluence/diversion can be configured. For detailed operation, please refer to Chapter 2 for wiring and Chapter 3 for tuning.
- The difference between Master 2 and Master 3 is that the Master 3 can be configured as confluent with other Slaves during confluence; however, the Master 2 can be configured for stand-alone operation.
- When Pr.03-13 is set as 2: Slave, at the same time, Pr.01-01 will be set as 2 and Pr.03-15 will be set as 1 automatically.

## 03-14 Slave's proportion of the Master's flow

Control mode **VF** **FOCPG** **FOCPM** Factory default: 100.0

Settings 0.0~65535.5 %

- This parameter setting is required only for the Master but not needed for the Slave.
- In a confluence system, this parameter value defines the Slave's portion of the Master's flow.

  Example: Slave is 60L/min and Master is 40L/min, so the setting is 60/40 * 100% = 150%
  For confluence of more than 2 pumps, the values for the slaves must be the same. For example, if the total flow for a three-pump system is 200L/min, where the Master is 40L/min, then the two Slaves should be 80L/min. The setting of Parameter 03-14 should be 160/40 = 400%

## 03-15 Source of frequency command

Control mode **VF** **FOCPG** **FOCPM** Factory default: 0

Settings 0: Digital Operation Panel
1: RS485 Communication
2~5: Reserved

- This parameter is used for EMVJ-MF01.For detailed operation; refer to Chapter 3 for tuning.
- In a confluence system, if the Slave's frequency command is given through the RS485 communication, the setting value should be 1.

## 03-16 Limit for the Slave reverse depressurization torque

Control mode **VF** **FOCPG** **FOCPM** Factory default: 20

Settings 0~500%

- Set the torque limit of the Slave when running reversely

## 03-17 Slave's activation level

Control mode **VF** **FOCPG** **FOCPM** Factory default: 50

Settings 0~100%

- This parameter setting is required only for the Master but not needed for the Slave.
- This parameter determines the activation level for the Slave. A 100% value corresponds to the full flow of the Master.

## 03-18 Communication error treatment

Control mode **VF** **FOCPG** **FOCPM** Factory default: 0

Settings
0: Warn and keep operation
1: Warn and ramp to stop
2: Warn and coast to stop
3: No action and no display

This parameter is used to set the handling status of the drive when a communication timeout error (such as disconnection) occurs.

## 03-19 Time-out detection

Control mode **VF** **FOCPG** **FOCPM** Factory default: 0.0

Settings 0.0~100.0 seconds

This parameter is used to set the time of the time-out event for the communication and the keypad transmission.

## 03-20 Start-up display selection

Control mode **VF** **FOCPG** **FOCPM** Factory default: 0

Settings
0: F (frequency command)
1: H (actual frequency)
2: Multi-function display (user-defined 00-04)
3: A (Output current)

This parameter is used to set the contents of the start-up screen. The content of the user-defined option is displayed in accordance with the setting value of Parameter 00-04.

## 03-21 Slave reverse operation for depressurization

Control mode **VF** **FOCPG** **FOCPM** Factory default: 0

Settings
0: Disabled
1: Enabled

This parameter setting is required only for the Slave but not needed for the Master.

When the parameter is set as 1, it is necessary to make sure that the outlet end of the Slave is not installed with any one-way valve and the parameter 03-16 is set as 500.

## 03-22 Slave closing level

Factory setting: 400

Settings 0~ 400 Bar

Set up this parameter from a Master. The slave pump(s) will be shut down when the master pump detects the pressure higher than the setting value at this parameter. The slave pump(s) will resume to run after the hybrid servo drive goes into stand by.

# *Chapter 5 Methods of Anomaly Diagnosis*

5-1 Unusual Signal
5-1-1 Indicator Display
5-1-2 Error Messages Displayed on Digital Operation Panel KPVJ-LE01
5-2 Over current (OC)
5-3 Ground fault (GFF)
5-4 Over voltage (OV)
5-5 Low voltage (Lv)
5-6 Overheat (OH1)
5-7 Overload (OL)
5-8 Phase loss in power supply (PHL)
5-9 Resolutions for electromagnetic noise and induction noise
5-10 Environment and facilities for installation

The Hybrid Servo Controller is capable of displaying warning messages such as over voltage, low voltage, and over current and equipped with the protection function. Once any malfunction occurs, the protection function will be activated and the Hybrid Servo Controller will stops its input, followed by the action of the anomaly connection point and stopping of the servo oil pump. Please refer to the cause and resolution that corresponds to the error message displayed by the Hybrid Servo Controller for troubleshooting. The error record will be stored in the internal memory of the Hybrid Servo Controller (up to the most recent six error messages) and can be read by the digital operation panel or communication through parametric readout.

**CAUTION**

- ☑ Upon the occurrence of anomaly, wait for five seconds after the anomaly is resolved before pressing the RESET key.
- ☑ For Hybrid Servo Controllers with power □ 22kW, wait for five minutes after the power is turned off and for ten minutes for models with power □ 30kW. Verify that the charging indicator is off. Measure the DC voltage between terminals ⊕~⊖, which should be below DC25V before opening the machine cover and starting the inspection.

# 5-1 Unusual Signal

## 5-1-1 Indicator Display

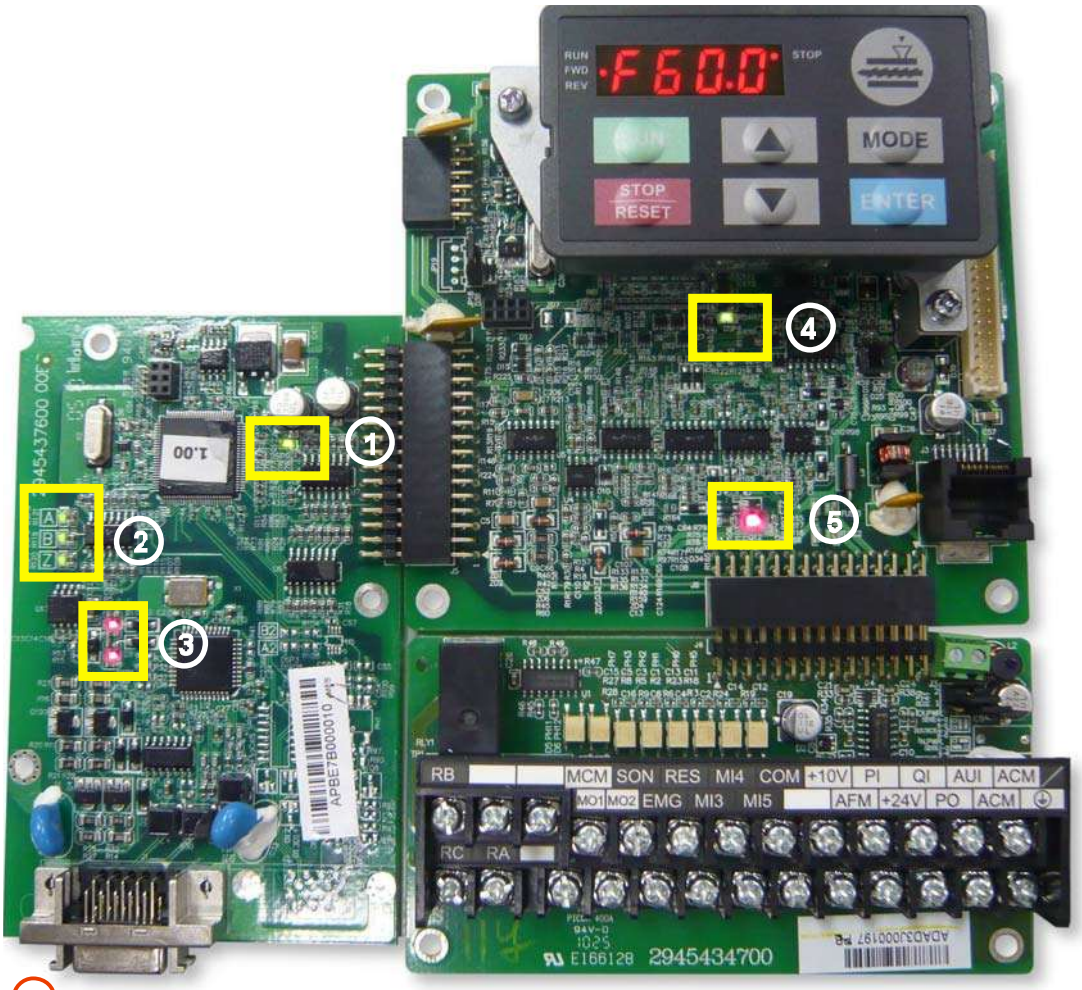


1 Indicator of PG card power

2 Indicator of Encoder feedback

3 Warning indicator
When the sin or cos phase voltage is lower than required values in the rotational transformer, the warning indicator will be on. Please check if the encoder wire is connected correctly. If it happens in operation, please check for any interference.

4 Power indicator

5 Power indicator

## 5-1-2 Error Messages Displayed on Digital Operation Panel KPVJ-LE01

| Display Code | Description of Anomaly | Troubleshooting |
|---|---|---|
| ocA | Over current occurs in acceleration; output current exceeds by three times the rated current of the frequency inverter. | 1. Check if the insulation of the wire from U-V-W to the hybrid servo motor is bad.<br><br>2. Check if the hybrid servo motor is stalled.<br><br>3. Such errors occur when the red light of PG card flashes. The causes of these errors could be loose contact/ disconnection between encoder, motor drive and motor.<br><br>4. When such errors occur at the beginning, during or at the end of pressure/ flow command, adjust the pressure/flow reference time (Pr00-46~ Pr00-49). Adjust also the ramp up/down rate of pressure/flow command (Pr00-29 to Pr00-32) from a controller or the motor drive.<br><br>5. When such errors occur while pressure/ flow command is constant, adjust PI value (Pr00-20 ~ Pr00-25).<br><br>6. Make sure if there's any disturbance/ noise, set Pr00-04: #11 (Pressure feedback), #12(Pressure command), 25 (flow command). Then observe if the values fluctuate.<br><br>7. Replace with the Hybrid Servo Controller with larger output capacity. |
| ocd | Over current occurs in deceleration; output current exceeds by three times the rated current of the frequency inverter. | |
| ocn | Over current occurs during constant speed; output current exceeds by three times the rated current of the frequency inverter. | |
| ocS | Over current occurs when the system is at stop. Unusual hardware circuit by current detection. | Send back to manufacturer for repair. |
| occ | Shorting of top and bottom bridges in IGBT module are detected by Hybrid Servo Controller. | Send back to manufacturer for repair. |
| ouA | Over voltage occurs on the internal DC high voltage side detected by Hybrid Servo Controller during acceleration. | 230V: DC 415V<br>460V: DC 830V<br><br>1. Check if the input voltage is within the range of voltage rating of Hybrid Servo Controller and monitor for any occurrence of surge voltage. |
| oud | Over voltage occurs on the internal DC high voltage side detected by Hybrid Servo Controller during deceleration. | |

| Display Code | Description of Anomaly | Troubleshooting |
|---|---|---|
| ovn | Over voltage occurs on the internal DC high voltage side detected by Hybrid Servo Controller during constant speed. | 2. For Hybrid Servo Controller with power below 22kW, the issue can be resolved by adjusting the software brake action level in Pr.02-00.<br><br>3. For Hybrid Servo Controller with power above 22kW, the issue can be resolved by adjusting the action level in the brake unit (Refer to Appendix B-6 for details.).<br><br>4. When such error occurred at the beginning, during or at the end of the pressure/ flow command, adjust Pr00-29 ~Pr0032 <Ramp up/down rate of pressure/ flow command> or Pr00-46 ~Pr00-49 <Pressure/ flow reference S1/S2 time>.<br><br>5. When such error occurred while the pressure/ flow command is constant, adjust Pr00-20 ~ Pr00-25 <PI value>. |
| ovS | Over voltage occurs when the system is at stop. Unusual hardware circuit by current detection | Check if the input voltage is within the range of voltage rating of Hybrid Servo Controller and monitor for any occurrence of surge voltage. |
| LvA | The DC voltage of Hybrid Servo Controller is lower than the setting in Pr.02-07 in acceleration | 1. Check if the voltage of input power is normal.<br><br>2. Check if there is any sudden heavy load.<br><br>3. Adjust the low voltage level in Pr.02-07.<br><br>4. Lvn often occurs when the motor drive has a power failure while the operating signals are still being sent. |
| Lvd | The DC voltage of Hybrid Servo Controller is lower than the setting in Pr.02-07 in deceleration | |
| Lvn | The DC voltage of Hybrid Servo Controller is lower than the setting in Pr.02-07 when running at constant speed | |
| LvS | The DC voltage of Hybrid Servo Controller is lower than the setting in Pr.02-07 when off | |
| PHL | Phase loss protection | 1. Check if only single phase power is sent or phase loss occurs for three phase models<br><br>2. For models with 40HP and above, check if the AC side fuse is blown. |
| GFF | Ground wire protection, applies when Hybrid Servo Controller detects the output is grounded and the ground current is higher than its rated value by over 50%. Note that this protection is only for Hybrid Servo Controller and not for human. | 1. Check the wire of hybrid servo motor is shorted or grounded.<br><br>2.Check if IGBT power module is damaged<br><br>3. Check if the output side wire has bad insulation. |
| oH1 | Overheating of IGBT detected by Hybrid Servo Controller, exceeding the protection level<br>7.5~15HP: 90 ºC<br>20~100HP: 100 ºC | 1. Check if ambient temperature is too high.<br><br>2. Check if there is any foreign object on the heat sink and if the fan is running.<br><br>3. Check if there is sufficient space for air circulation for Hybrid Servo Controller. |

| Display Code | Description of Anomaly | Troubleshooting |
|---|---|---|
| oH2 | Overheating of heat sink detected by Hybrid Servo Controller, exceeding the protection level (90 ºC). | 1. Check if ambient temperature is too high.<br><br>2. Check if there is any foreign object on the heat sink and if the fan is running.<br><br>3.Check if there is sufficient space for air circulation for Hybrid Servo Controller |
| oH3 | (02-09 PTC level) Overheating inside the motor drive detected by Hybrid Servo Controller, exceeding the protection level (Pr02-09 PTC level). | 1. Check the control board, see if J7 is switched to KTY84 but external terminals AUI and CM don't receive signals from KTY84-130.<br><br>2.Check if the motor drive is blocked<br><br>3.Check if the ambient temperature is too high<br>4.Increase the capacity of the motor drive |
| oHF | IGBT overheated and unusual fan function | Check the fan kit to see if it is blocked.<br>Return to factory for repair. |
| oL | Output current exceeds the maximum capacity of Hybrid Servo Controller | 1. Check if the hybrid servo motor is stalled.<br><br>2. Check if the oil pump is stuck.<br><br>3. Such errors occur when the red light of PG card flashes. The causes of these errors could be loose contact/ disconnection between encoder, motor drive and motor.<br><br>4. Set Pr00-04=29 (v2.06 and above), observe if the value returns to zero after every molding cycle. If the number accumulates to 100, OL occurs.<br><br>5. Change the molding conditions.<br><br>6. Replace with the Hybrid Servo Controller with larger output capacity. |
| EoL 1 | Servo motor overloaded | 1. Set Pr00-04=30 (v2.06 and above), observe if the value returns to zero after every molding cycle. If the number accumulates to 100, EoL occurs.<br>Change the molding conditions.<br><br>2. Replace with the Hybrid Servo Controller with larger output capacity,<br><br>3. If the pressure-flow is too high during blending, such error occurs easily. To clear this error, decrease the pressure command and the flow command.<br>Note that this overload protection is only available for version A motors. |

| Display Code | Description of Anomaly | Troubleshooting |
|---|---|---|
| FuSE | DC Fuse blown on (FUSE), for models below (including) 30HP | 1. Check if the transistor module fuse is bad.<br><br>2. Check if the load side is shorted. |
| cF1 | Error on memory write in | Press RESET key to return all parameters to factory default values<br>If the above does not work, send back to manufacturer for repair |
| cF2 | Error on memory readout | |
| cd0 | Detection of abnormal output of three-phase total current | Turn off the power and restart. If the same problem persists, send back to manufacturer for repair |
| cd1 | Detection of abnormal current in phase U | |
| cd2 | Detection of abnormal current in phase V | |
| cd3 | Detection of abnormal current in phase W | |
| EF | When external terminals EF are closed, Hybrid Servo Controller stops its output | Troubleshoot and press ”RESET” |
| EF1 | When external EMG terminal is not connected to the heating switch of hybrid servo motor or the motor is overheated (130 ºC), Hybrid Servo Controller stops its input | Troubleshoot and press ”RESET” |
| bF | Braking transistor error | Press RESET. If the display still shows “bF”, please send the unit back to manufacturer for repair |

| Display Code | Description of Anomaly | Troubleshooting |
|---|---|---|
| tH1o | Abnormal in OH1 hardware wire | Send back to manufacturer for repair. |
| tH2o | Abnormal in OH2 hardware wire | Send back to manufacturer for repair. |
| Hd0 | Clamp current detection error (Hd0) | Turn off the power and restart. If the same problem persists, send back to manufacturer for repair. |
| Hd1 | Over-current detection error (Hd1) | |
| Hd2 | Over-voltage detection error (Hd2) | |
| Hd3 | Ground current detection error (Hd3) | |
| PGF1 | PG feedback error (PGF1) | The actual rotating speed doesn't follow speed command and the elapsed time longer than 1 second. In this case, check if Pr01-30 Is not equal to zero and check PG feedback wiring. |
| PGF2 | PG feedback loss (PGF2) | Check the PG feedback wiring. It could be an open circuit. |
| PGF3 | Stalled PG feedback (the actual rotating speed is 115% faster than the maximum speed and the elapsed time longer than one second) | 1. Check the PG feedback wiring.<br>2. Check if PI gain and the settings for acceleration/ deceleration are suitable.<br>3. Check if there is an output phase loss. The causes of these errors could be loose contact/ disconnection between encoder, hybrid servo motor controller and motor. (OC might also occur in different conditions.).<br>4. Check if the connection between oil pump and motor is stuck.<br>5. Send back to manufacturer for repair. |
| PGF4 | PG slip error (PGF4 | |
| PGF5 | PG card information error (PGF5) | Check if the settings of Pr.01-26 match those in the installed PG card. If so, please send back to manufacturer for repair. |
| Sry | Abnormal installation or action of JP18, the safety loop card/control board pin | 1. Check if the safety loop card is installed correctly on the control board and if the output action is normal.<br>2. Check if pin JP18 is inserted into the wrong position on the control board. |
| ouP | Overpressure (ovP) | 1. Check if the pressure sensor is working properly and if its specification is correct.<br>2.Adjust pressure PI control Pr.00-20~00-37 Check if the wiring of pressure sensor is correct.<br>3. Check the position of SW100 dip switch (current type or open collector) on the control board if correct. |
| PFbF | Pressure feedback fault (PfbF) | 1. Check if the wiring of pressure sensor is correct. It could be open-circuit<br>2. Check if the pressure sensor signal is below 1V. |

| Display Code | Description of Anomaly | Troubleshooting |
|---|---|---|
| AUE | Auto tuning error (AuE) | 1. Check if the wiring of the motor is correct.<br>2. Check if the motor's parameter settings are correct. |
| PrEu | Oil pump runs reversely (Prev) | 1. Check if there is any zero shift at the pressure sensor.<br>2. Check if the wiring of pressure sensor is correct. |
| noIL | Oil shortage (noil) | 1. Check the amount of oil in the oil tank.<br>2. Check if any leakage at hydraulic circuit.<br>3. If there's a suction filter installed at the oil inlet, check if that suction filter is blocked up. |

## Alarm reset

Once the issue that tripped the system and triggers the alarm is eliminated, one can resume the system to normal status by pressing the RESET key on the digital keypad (as shown in the figure) to set the external terminal to "Anomaly reset command" and sending the command by turning on the terminal or via communication. Before any anomaly alarm is resolved, make sure the operation signal is at open circuit status (OFF) to avoid immediate machine running upon anomaly reset that may case mechanical damage or personnel casualty.

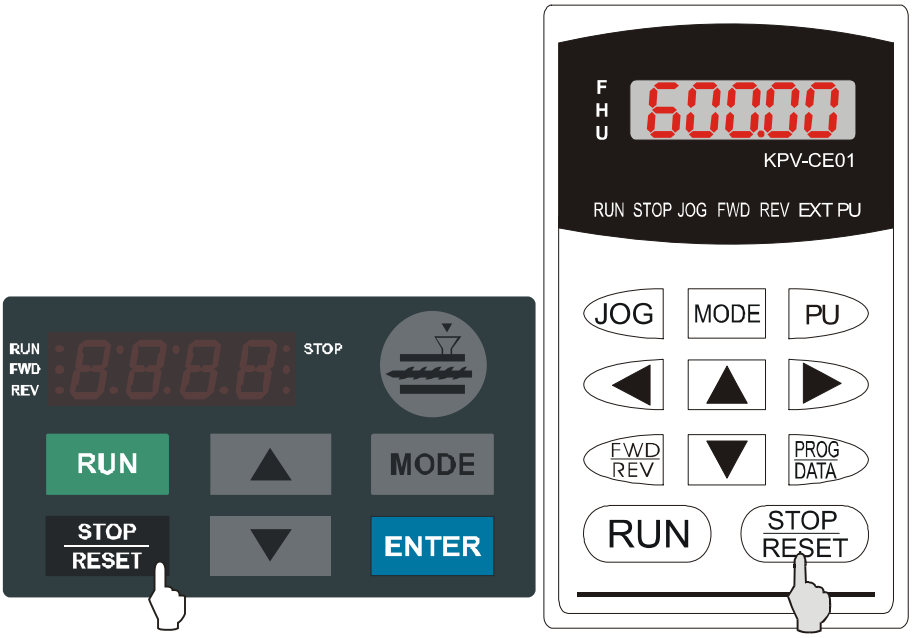

# 5-2 Over Current (OC)

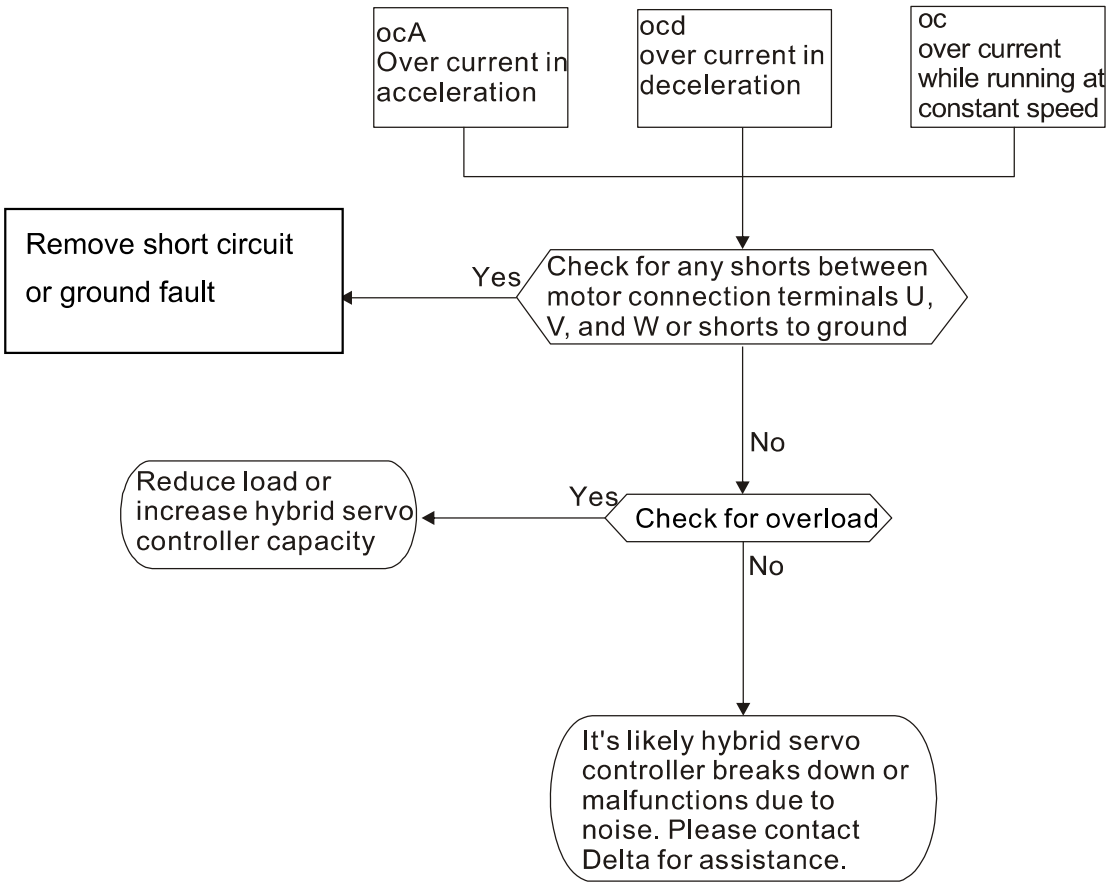


# 5-3 Ground Fault (GFF)

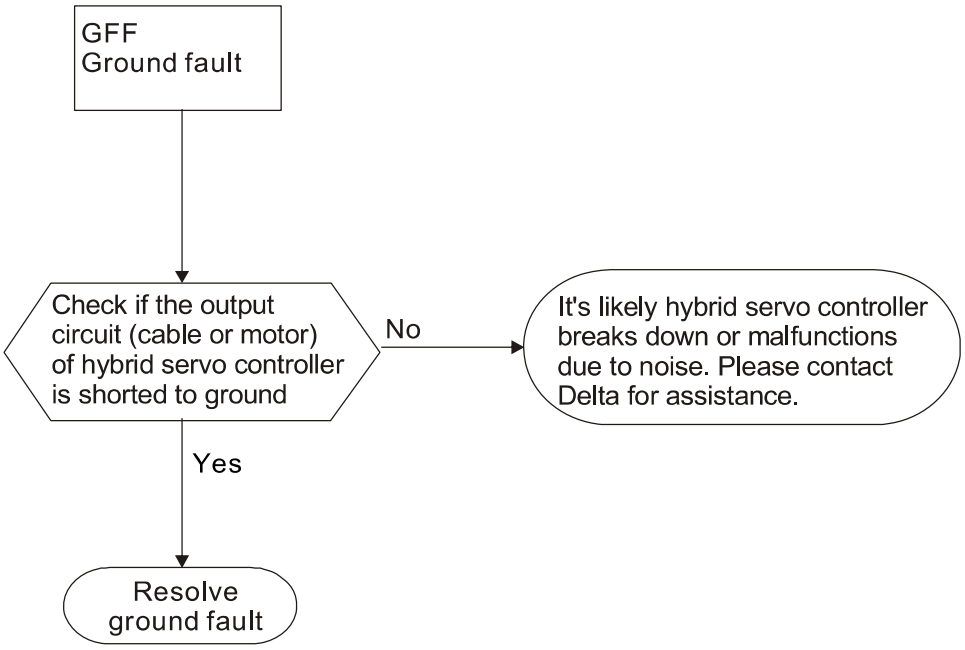

# 5-4 Over Voltage (ov)

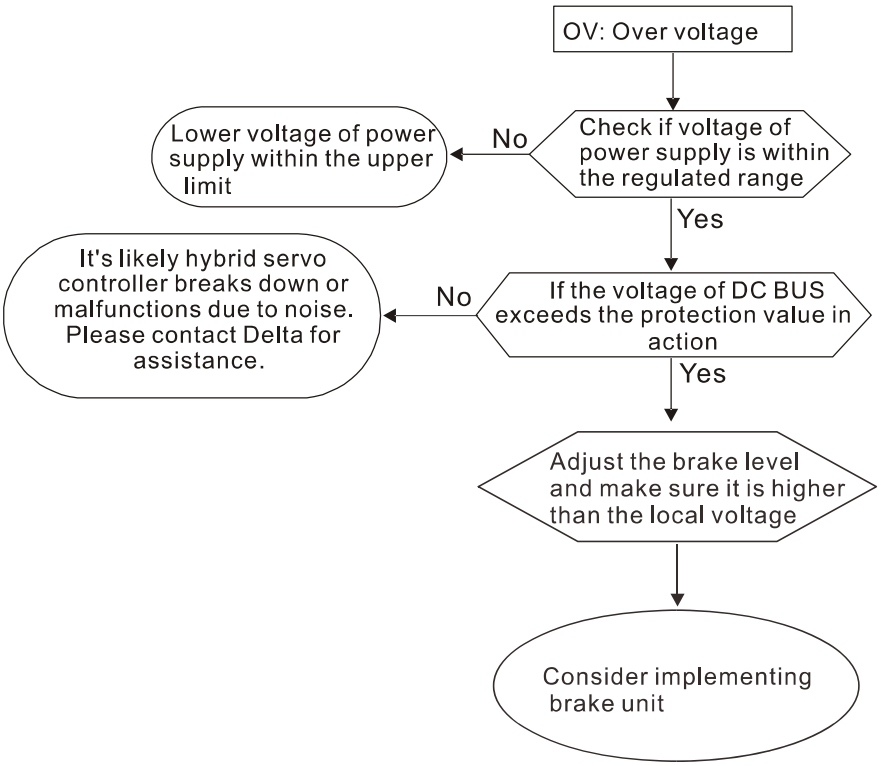


If you consider installing a brake unit, follow the wiring diagram below.

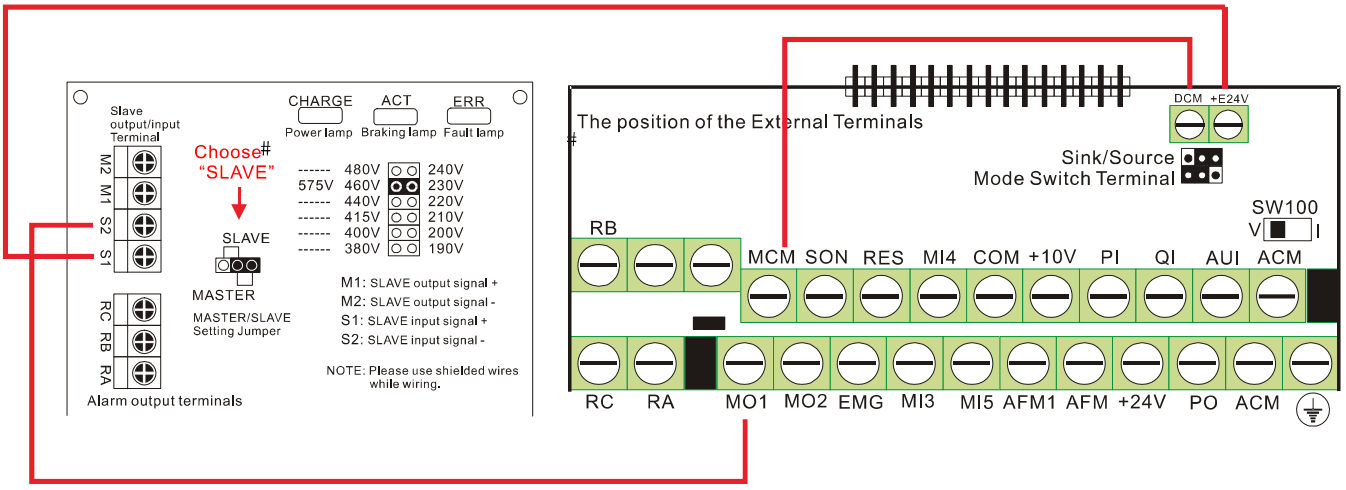

# 5-5 Low Voltage (Lv)

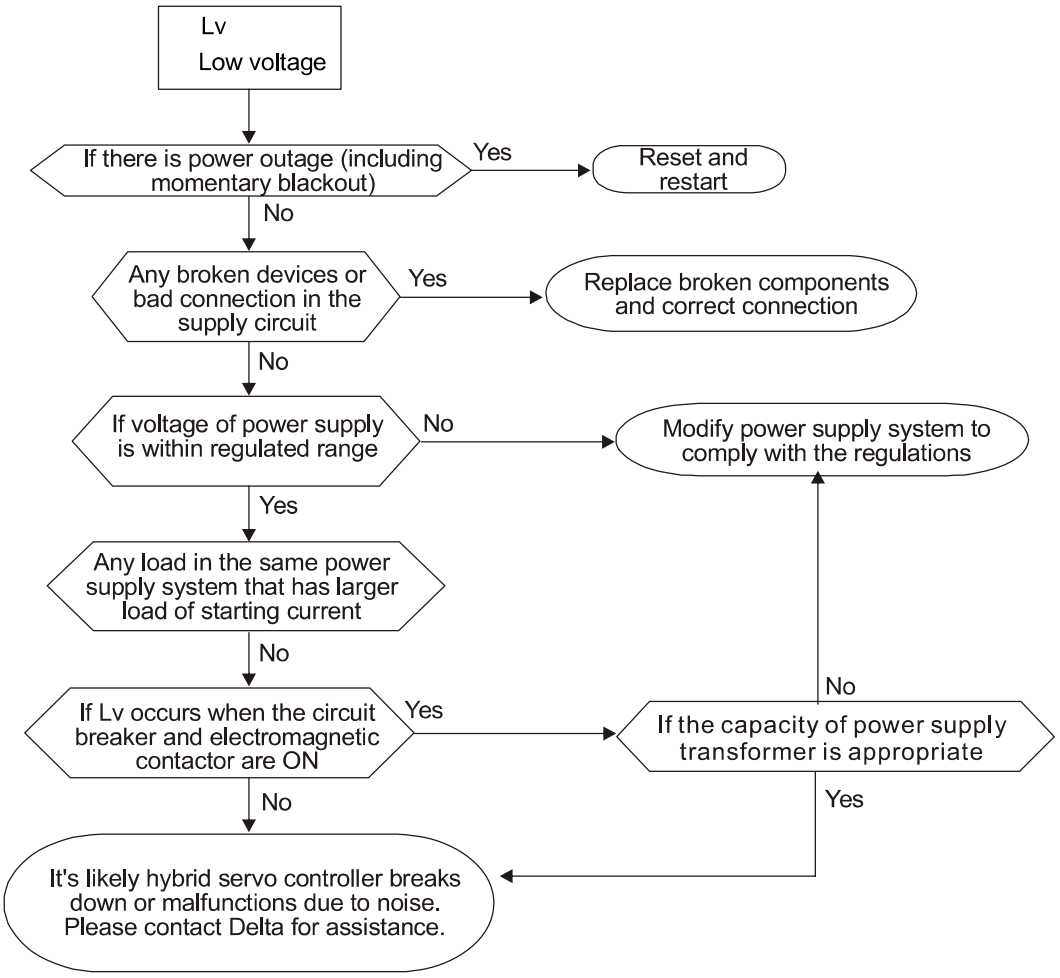

# 5-6 Over Heat (OH1)

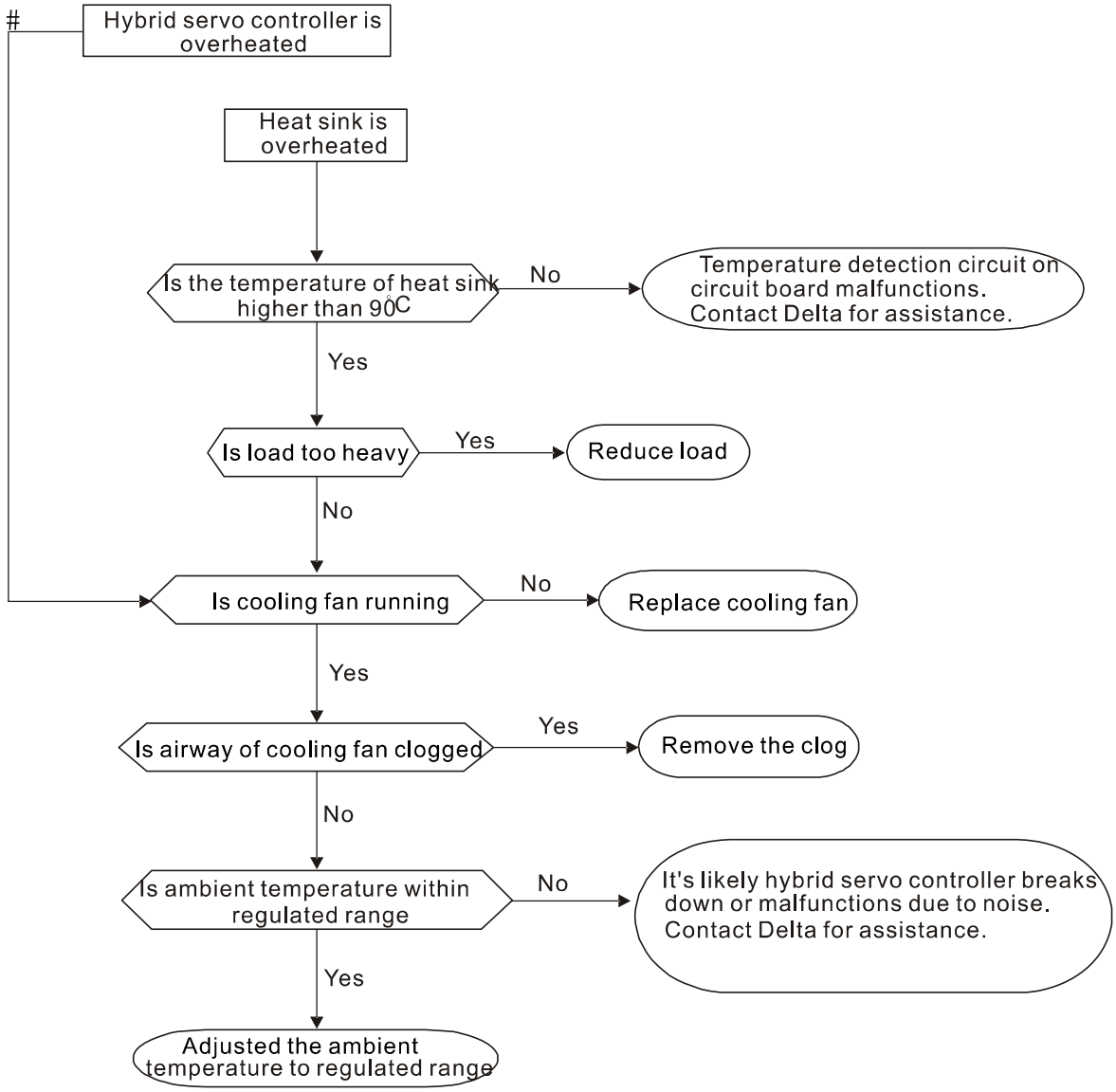


# 5-7 Overload (oL)

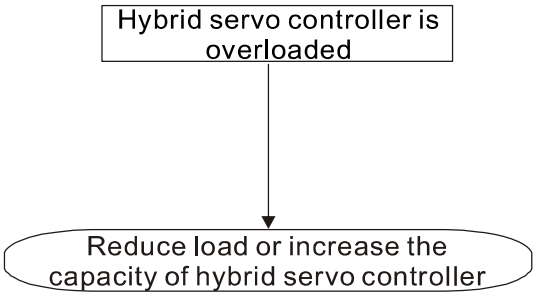

# 5-8 Phase Loss (PHL)

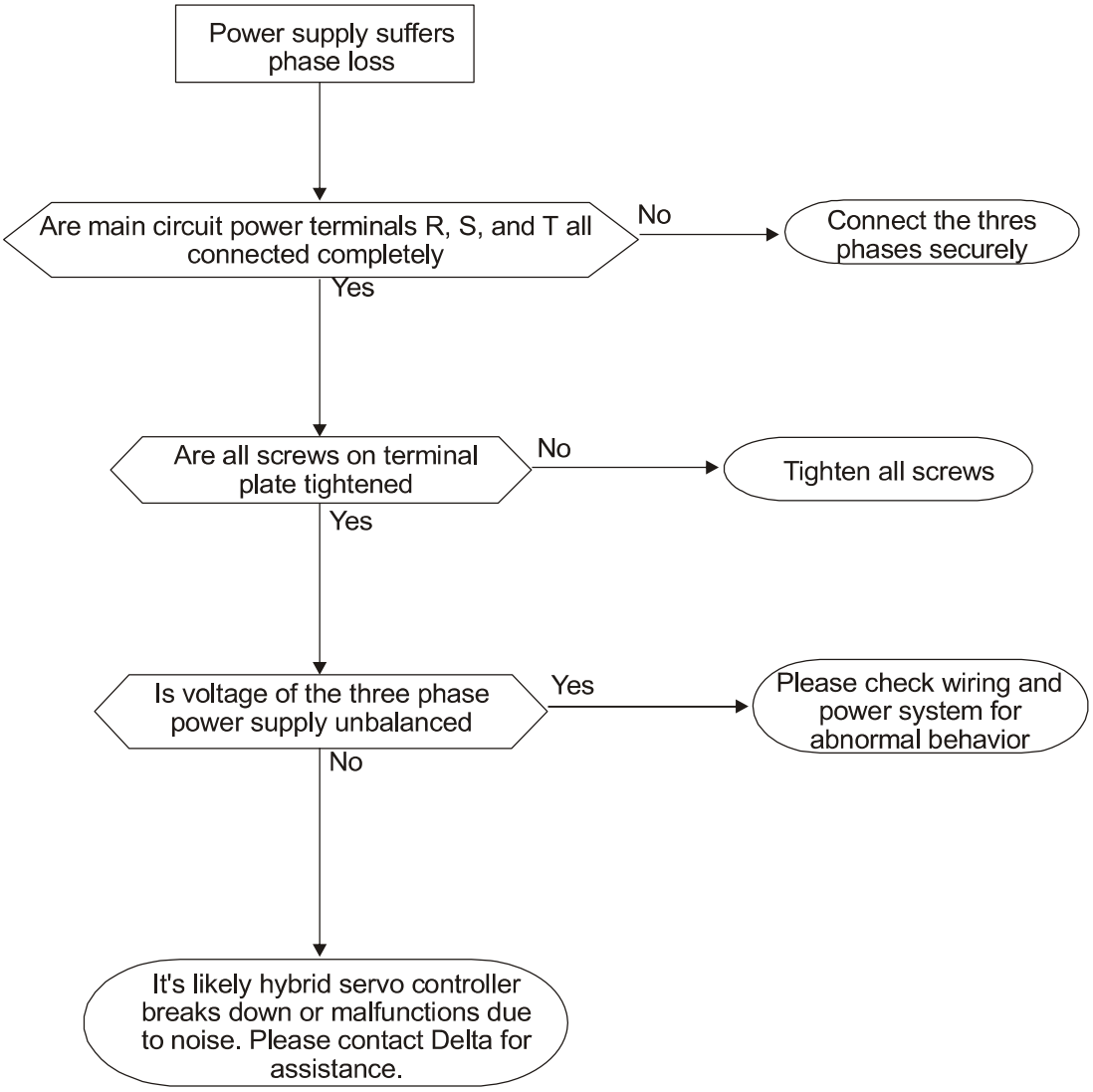

# 5-9 Electromagnetic/Induction Noise

If there exist noise sources around Hybrid Servo Controller, they will affect Hybrid Servo Controller through radiation or the power lines, leading to malfunction of control loop and causing tripping or even damage of Hybrid Servo Controller. One natural solution is to make Hybrid Servo Controller immune to noise. However, it is not economical and the improvement is limited. It is best to resort to methods that achieve improvements outside Hybrid Servo Controller.

1. Add surge killer on the relay or contact to suppress switching surge between ON/OFF.
2. Shorten the wiring length of the control circuit or serial circuit and separate from the main circuit wiring.
3. Comply with the wiring regulation for those shielded wire and use isolation amplifier for long wire.
4. The ground terminal of Hybrid Servo Controller must be connected to ground by following the associated regulations. It must have its own ground connection and cannot share with electrical welder and other power equipments.
5. Insert noise filter to the input terminal of Hybrid Servo Controller to prevent the noise entering from the power lines.

In a word, three-level solutions for electromagnetic noise are “no product”, “no spread” and “no receive”.

# 5-10 Environment and Facilities for Installation

The Hybrid Servo Controller is a device for electronic components. Detailed descriptions of the environment suitable for its operation can be found in the specifications. If the listed regulations cannot be followed for any reason, there must be corresponding remedial measures or contingency solutions.

1. To prevent vibration, anti-vibration spacer is the last choice. The vibration tolerance must be within the specification. The vibration effect is equal to the mechanical stress and it cannot occur frequently, continuously or repeatedly to prevent damaging AC motor drive.
2. Store in a clean and dry location free from corrosive fumes/dust to prevent rustiness, poor contact. It also may cause short by low insulation in a humid location. The solution is to use both paint and dust-proof. For particular occasion, use the enclosure with whole-seal structure.
3. The ambient temperature must be just right. If the temperature is too high or too low, the lifetime and action reliability of electronic components will be affected. For semiconductor devices, once the conditions exceed the rated values, consequences associated with “damage” are expected. As a result, in addition to providing cooler and shades that block the direct sunlight that are aimed to achieve required ambient temperature, it is also necessary to perform cleaning and spot check the air filter in the storage tray of Hybrid Servo Controller and the angle of cooling fan. Moreover, the microcomputer may not work at extremely temperature, space heater is required for machines that are installed and operated in cold regions.
4. Avoid moisture and occurrence of condensation. If the Hybrid Servo Controller is expected to be shut down for an extended period of time, be careful not to let condensation happen, once the air conditioning is turned off. It is also preferred that the cooling equipment in the electrical room can also work as a dehumidifier.

# *Chapter 6 Maintenance*

6-1 Maintenance and Inspections
6-2 Greasy Dirt Problem
6-3 Fiber Dust Problem
6-4 Erosion Problem
6-5 Industrial Dust Problem
6-6 Wiring and Installation Problem
6-7 Multi-function Input/Output Terminals Problem

The Hybrid Servo Controller has a comprehensive fault diagnostic system that includes several different alarms and fault messages. Once a fault is detected, the corresponding protective functions will be activated. The following faults are displayed as shown on the Hybrid Servo Controller digital keypad display. The six most recent faults can be read from the digital keypad or communication.

The Hybrid Servo Controller is made up by numerous components, such as electronic components, including IC, resistor, capacity, transistor, and cooling fan, relay, etc. These components can't be used permanently. They have limited-life even under normal operation. Preventive maintenance is required to operate this Hybrid Servo Controller in its optimal condition, and to ensure a long life.

Check your Hybrid Servo Controller regularly to ensure there are no abnormalities during operation and follows the precautions:

| | |
|---|---|
| **CAUTION** | ☑ Wait 5 seconds after a fault has been cleared before performing reset via keypad of input terminal.<br>☑ When the power is off after 5 minutes for □ 22kW models and 10 minutes for □ 30kW models, please confirm that the capacitors have fully discharged by measuring the voltage between + and -. The voltage between + and - should be less than 25VDC.<br>☑ Only qualified personnel can install, wire and maintain drives. Please take off any metal objects, such as watches and rings, before operation. And only insulated tools are allowed.<br>☑ Never reassemble internal components or wiring.<br>☑ Make sure that installation environment comply with regulations without abnormal noise, vibration and smell. |

# 6-1 Maintenance and Inspections

Before the check-up, always turn off the AC input power and remove the cover. Wait at least 10 minutes after all display lamps have gone out, and then confirm that the capacitors have fully discharged by measuring the voltage between DC+ and DC-. The voltage between DC+ and DC-should be less than 25VDC.

**Ambient environment**

| Check Items | Methods and Criterion | Maintenance Period | | |
|---|---|---|---|---|
| | | Daily | Half Year | One Year |
| Check the ambient temperature, humidity, vibration and see if there are any dust, gas, oil or water drops | Visual inspection and measurement with equipment with standard specification | ○ | | |
| If there are any dangerous objects | Visual inspection | ○ | | |

**Voltage**

| Check Items | Methods and Criterion | Maintenance Period | | |
|---|---|---|---|---|
| | | Daily | Half Year | One Year |
| Check if the voltage of main circuit and control circuit is correct | Measure with multimeter with standard specification | ○ | | |

**Digital Keypad Display**

| Check Items | Methods and Criterion | Maintenance Period | | |
|---|---|---|---|---|
| | | Daily | Half Year | One Year |
| Is the display clear for reading | Visual inspection | ○ | | |
| Any missing characters | Visual inspection | ○ | | |

**Mechanical parts**

| Check Items | Methods and Criterion | Maintenance Period | | |
|---|---|---|---|---|
| | | Daily | Half Year | One Year |
| If there is any abnormal sound or vibration | Visual and aural inspection | | ○ | |
| If there are any loose screws | Tighten the screws | | ○ | |
| If any part is deformed or damaged | Visual inspection | | ○ | |
| If there is any color change by overheating | Visual inspection | | ○ | |
| If there is any dust or dirt | Visual inspection | | ○ | |

**Main circuit**

| Check Items | Methods and Criterion | Maintenance Period | | |
|---|---|---|---|---|
| | | Daily | Half Year | One Year |
| If there are any loose or missing screws | Tighten or replace the screw | ○ | | |
| If machine or insulator is deformed, cracked, damaged or with color change due to overheating or ageing | Visual inspection<br>**NOTE: Please ignore the color change of copper plate** | | ○ | |
| If there is any dust or dirt | Visual inspection | | ○ | |

**Terminals and wiring of main circuit**

| Check Items | Methods and Criterion | Maintenance Period | | |
|---|---|---|---|---|
| | | Daily | Half Year | One Year |
| If the terminal or the plate is color change or deformation due to overheat | Visual inspection | | ○ | |
| If the insulator of wiring is damaged or color change | Visual inspection | | ○ | |
| If there is any damage | Visual inspection | ○ | | |

**DC capacity of main circuit**

| Check Items | Methods and Criterion | Maintenance Period | | |
|---|---|---|---|---|
| | | Daily | Half Year | One Year |
| If there is any leak of liquid, color change, crack or deformation | Visual inspection | ○ | | |
| If the safety valve is not removed? If valve is inflated? | Visual inspection | ○ | | |
| Measure static capacity when required | | ○ | | |

**Resistor of main circuit**

| Check Items | Methods and Criterion | Maintenance Period | | |
|---|---|---|---|---|
| | | Daily | Half Year | One Year |
| If there is any peculiar smell or insulator cracks due to overheat | Visual inspection, smell | ○ | | |
| If there is any disconnection | Visual inspection | ○ | | |
| If connection is damaged? | Measure with multimeter with standard specification | ○ | | |

**Transformer and reactor of main circuit**

| Check Items | Methods and Criterion | Maintenance Period | | |
|---|---|---|---|---|
| | | Daily | Half Year | One Year |
| If there is any abnormal vibration or peculiar smell | Visual, aural inspection and smell | ○ | | |

**Magnetic contactor and relay of main circuit**

| Check Items | Methods and Criterion | Maintenance Period | | |
|---|---|---|---|---|
| | | Daily | Half Year | One Year |
| If there are any loose screws | Visual and aural inspection | ○ | | |
| If the contact works correctly | Visual inspection | ○ | | |

**Printed circuit board and connector of main circuit**

| Check Items | Methods and Criterion | Maintenance Period | | |
|---|---|---|---|---|
| | | Daily | Half Year | One Year |
| If there are any loose screws and connectors | Tighten the screws and press the connectors firmly in place. | | ○ | |
| If there is any peculiar smell and color change | Visual and smell inspection | | ○ | |
| If there is any crack, damage, deformation or corrosion | Visual inspection | | ○ | |
| If there is any liquid is leaked or deformation in capacity | Visual inspection | | ○ | |

**Cooling fan of cooling system**

| Check Items | Methods and Criterion | Maintenance Period | | |
|---|---|---|---|---|
| | | Daily | Half Year | One Year |
| If there is any abnormal sound or vibration | Visual, aural inspection and turn the fan with hand (turn off the power before operation) to see if it rotates smoothly | | ○ | |
| If there is any loose screw | Tighten the screw | | ○ | |
| If there is any color change due to overheat | Change fan | | ○ | |

**Ventilation channel of cooling system**

| Check Items | Methods and Criterion | Maintenance Period | | |
|---|---|---|---|---|
| | | Daily | Half Year | One Year |
| If there is any obstruction in the heat sink, air intake or air outlet | Visual inspection | | ○ | |

**NOTE**

Please use the neutral cloth for clean and use dust cleaner to remove dust when necessary.

# 6-2 Greasy Dirt Problem

Serious greasy dirt problems generally occur in processing industries such as machine tools, punching machines and so on. Please be aware of the possible damages that greasy oil may cause to your drive:

1. Electronic components that silt up with greasy oil may cause the drive to burn out or even explode.
2. Most greasy dirt contains corrosive substances that may damage the drive.

**Solution:**

Install the Hybrid Servo Controller in a standard cabinet to keep it away from dirt. Clean and remove greasy dirt regularly to prevent damage of the drive.

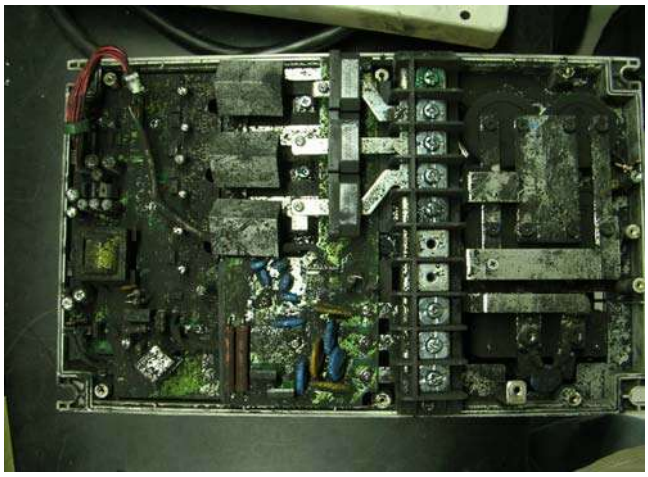

# 6-3 Fiber Dust Problem

Serious fiber dust problems generally occur in the textile industry. Please be aware of the possible damages that fiber may cause to your drives:

1. Fiber that accumulates or adheres to the fans will lead to poor ventilation and cause overheating problems.
2. Plant environments in the textile industry have higher degrees of humidity that may cause the drive to burn out, become damaged or explode due to wet fiber dust adhering to the devices.

**Solution:**

Install the Hybrid Servo Controller in a standard cabinet to keep it away from fiber dust. Clean and remove fiber dust regularly to prevent damage to the drive.

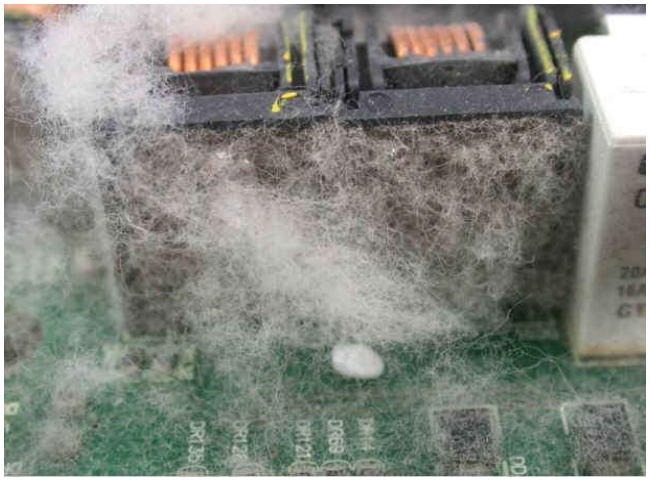

# 6-4 Erosion Problem

Erosion problems may occur if any fluids flow into the drives. Please be aware of the damages that erosion may cause to your drive.

1. Erosion of internal components may cause the drive to malfunction and possibility to explode.

**Solution:**

Install the Hybrid Servo Controller in a standard cabinet to keep it away from fluids. Clean the drive regularly to prevent erosion.

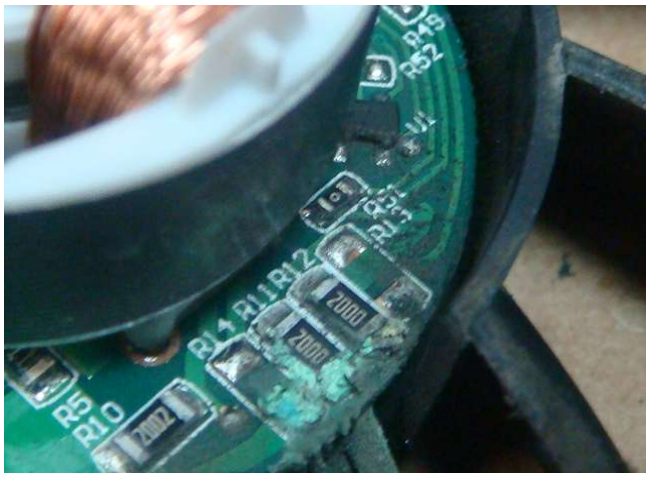

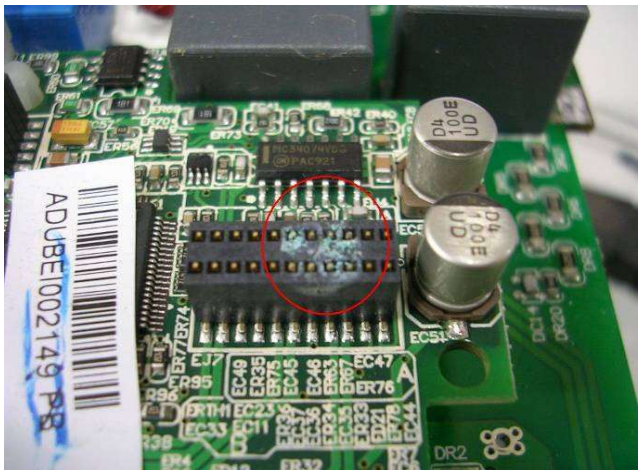


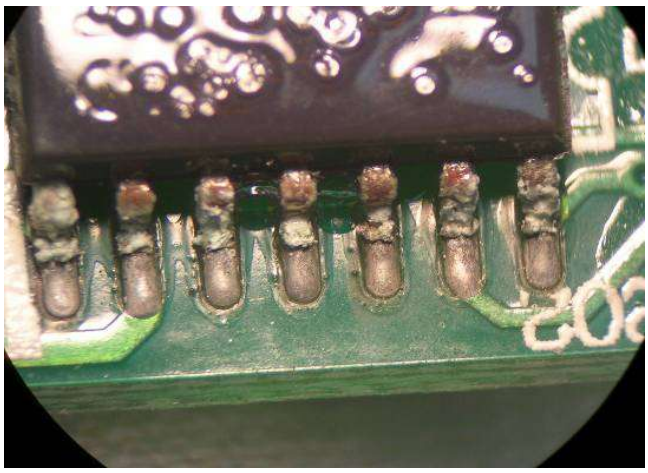

# 6-5 Industrial Dust Problem

Serious industrial dust pollution frequently occurs in stone processing plants, flour mills, cement plants, and so on. Please be aware of the possible damage that industrial dust may cause to your drives:

1. Dust accumulating on electronic components may cause overheating problem and shorten the service life of the drive.
2. Conductive dust may damage the circuit board and may even cause the drive to explode.

**Solution:**

Install the Hybrid Servo Controller in a standard cabinet and cover the drive with a dust cover. Clean the cabinet and ventilation hole regularly for good ventilation.

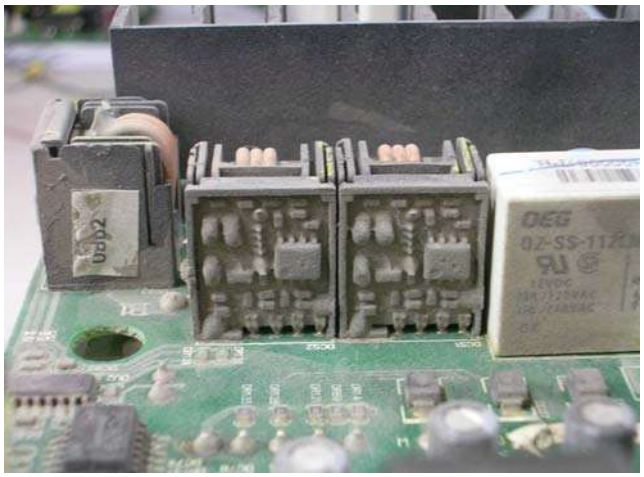

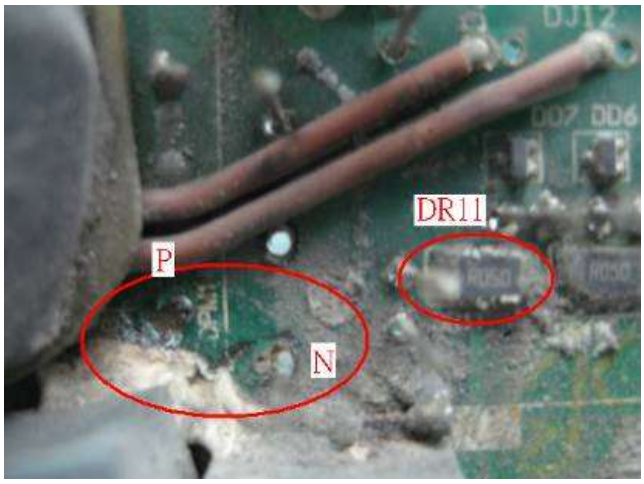

# 6-6 Wiring and Installation Problem

When wiring the drive, the most common problem is wrong wire installation or poor wiring. Please be aware of the possible damages that poor wiring may cause to your drives:

1. Screws are not fully fastened. Occurrence of sparks as impedance increases.
2. If a customer has opened the drive and modified the internal circuit board, the internal components may have been damaged.

**Solution:**

Ensure all screws are fastened when installing the Hybrid Servo Controller. If the Hybrid Servo Controller functions abnormally, send it back to the repair station. DO NOT try to reassemble the internal components or wire.

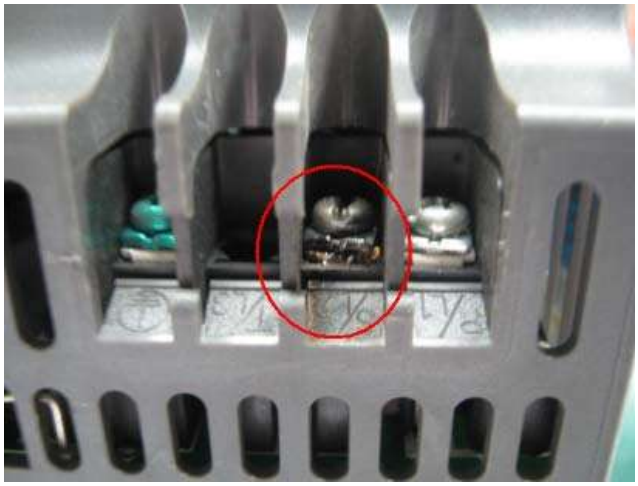

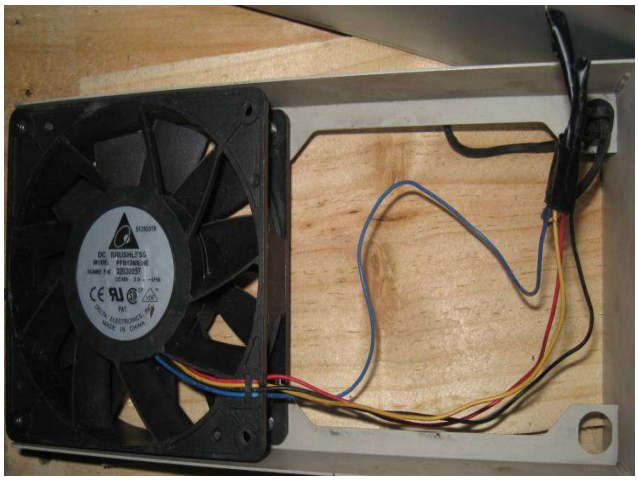

# 6-7 Multi-function Input/Output Terminals Problem

Multi-function input/output terminal errors are generally caused by over usage of terminals and not following specifications. Please be aware of the possible damages that errors on multi-function input/output terminals may cause to your drives:

1. Input/output circuit may burns out when the terminal usage exceeds its limit.

**Solution:**

Refer to the user manual for multi-function input output terminals usage and follow the specified voltage and current. DO NOT exceed the specification limits.

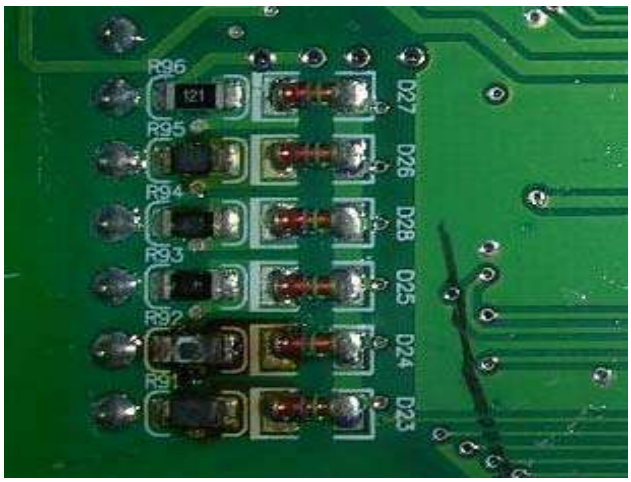


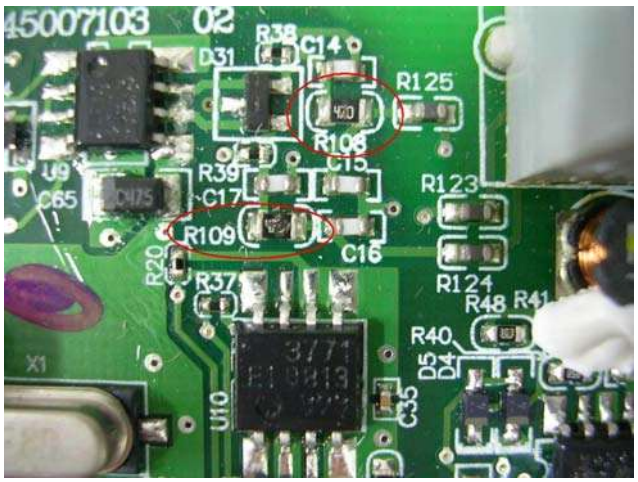


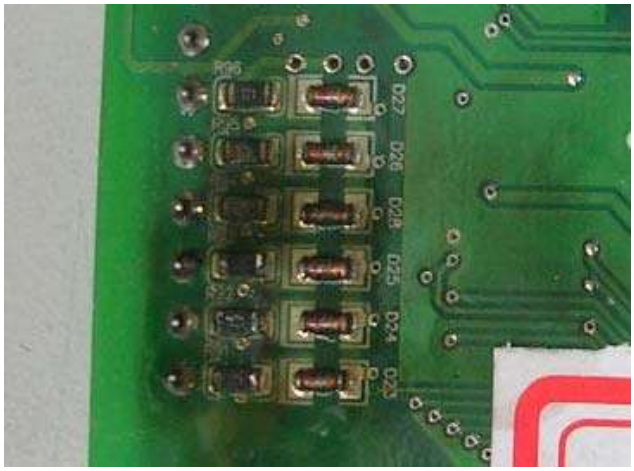

# *Appendix A: Instructions of Product Packaging*

A-1 Descriptions of Product packaging: version A
A-2 Unpacking: version A
A-3 Detailed List of Product Packaging: version A
A-4 Detailed List of Product Packaging: version C

| | |
|---|---|
| CAUTION | ☑ This product is made by a manufacturing process with strict quality control. If the product is damaged in the delivery by external force or crushing, please contact your local agents. |

# A-1 Descriptions of Product Packaging: v. A

Packaging of the external box

Models:

HES063H23A; HES080G23A; HES080H23A;

HES100G23A; HES100H23A;

HES063G43A;HES063H43A; HES080G43A;

HES080H43A; HES100G43A; HES100H43A;

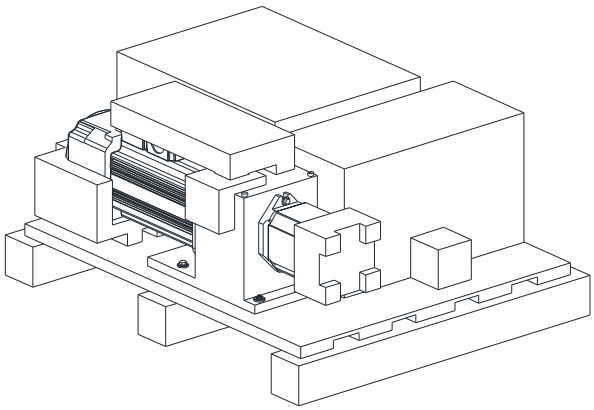

Models:

HES125G23A; HES125G43A;

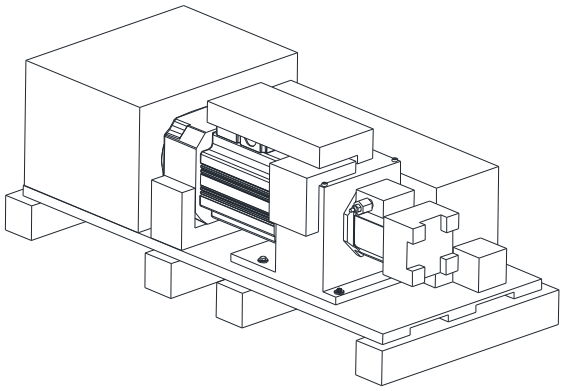

Models:

HES125H23A; HES160G23A;

HES125H43A; HES160G43A; HES160H43A; HES200G43A

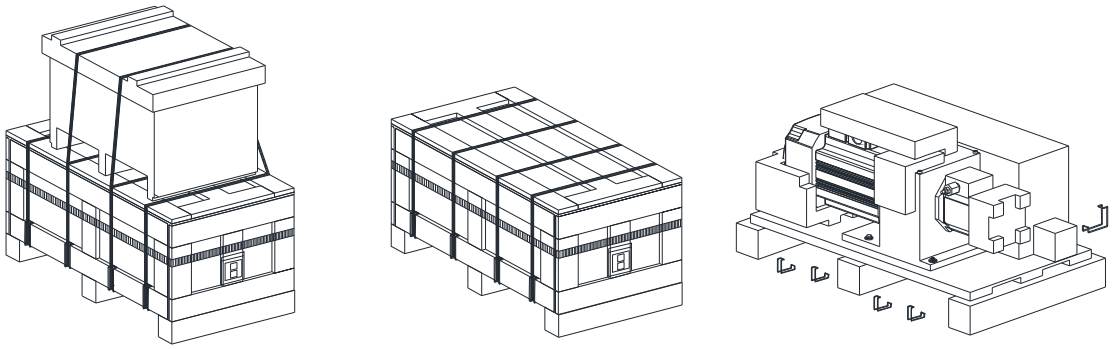

# A-2 Unpacking: v. A

STEP 1: Use flat head screwdriver to remove all the clips on the side of the crate.

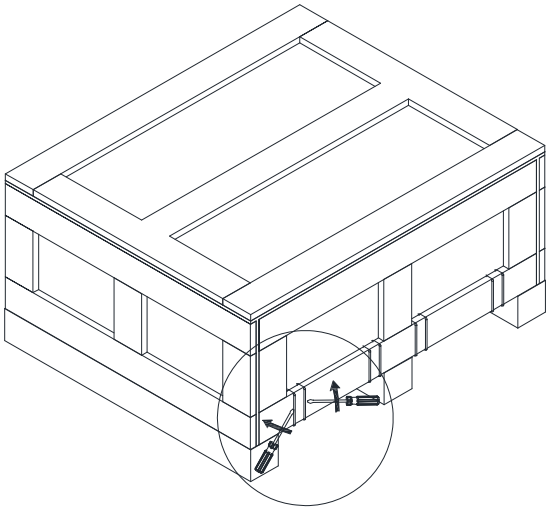

STEP 2: Remove the bubble bag and the tube.

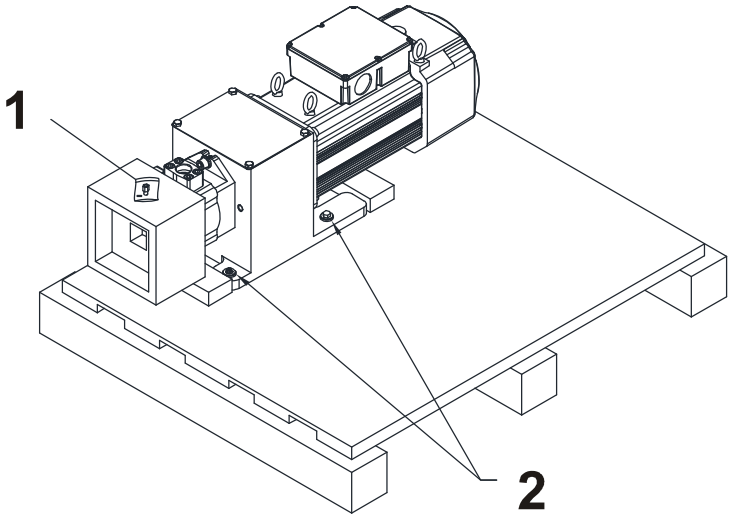


STEP 3: Lift the drive by using two lifting holes.

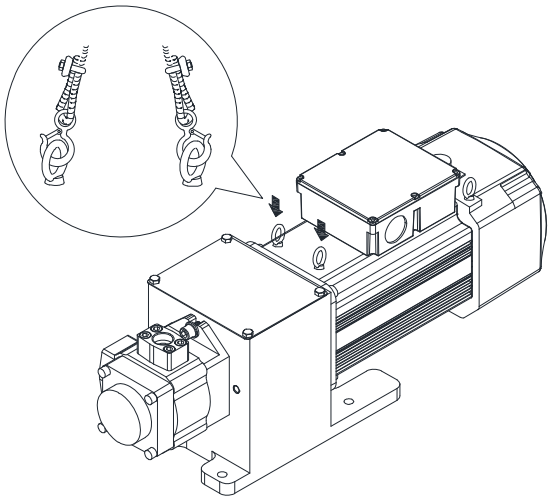

# A-3 Detailed List of Product Packaging: v.A

HES063H23A

1 Servo controller VFD110VL23A06HA, corresponding PG card EMVJ-PG02R

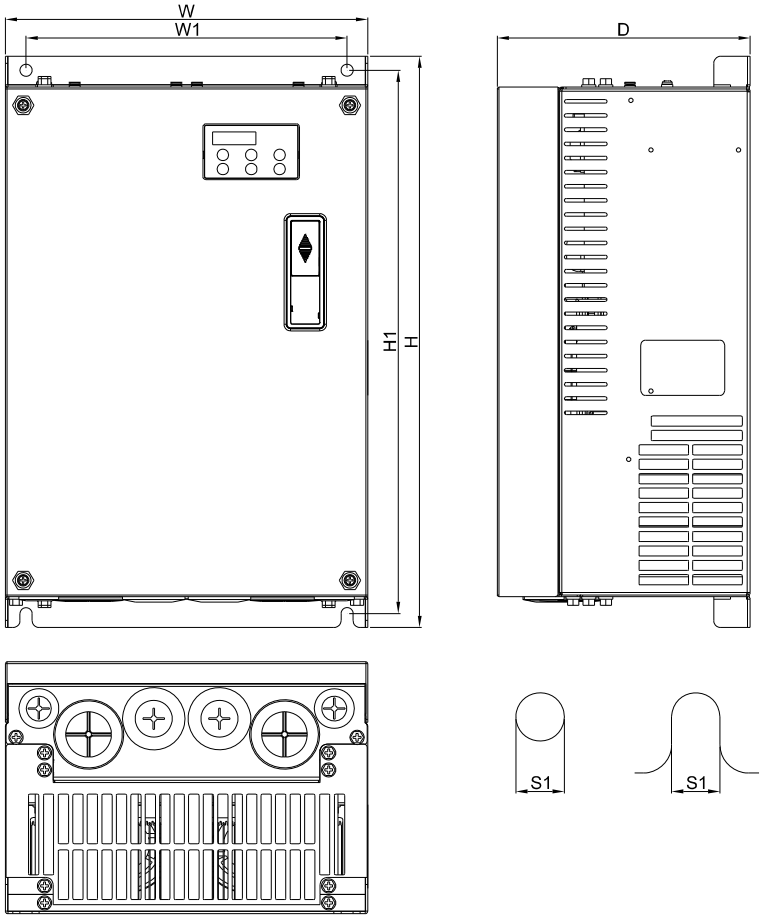


Unit: mm[inch]

| Frame | W | W1 | H | H1 | D | S1 |
|---|---|---|---|---|---|---|
| C | 235.0 [9.25] | 204.0 [8.03] | 350.0 [13.78] | 337.0 [13.27] | 146.0 [5.75] | 6.5 [0.26] |

2 Servo oil pump HSP-025-110-23A

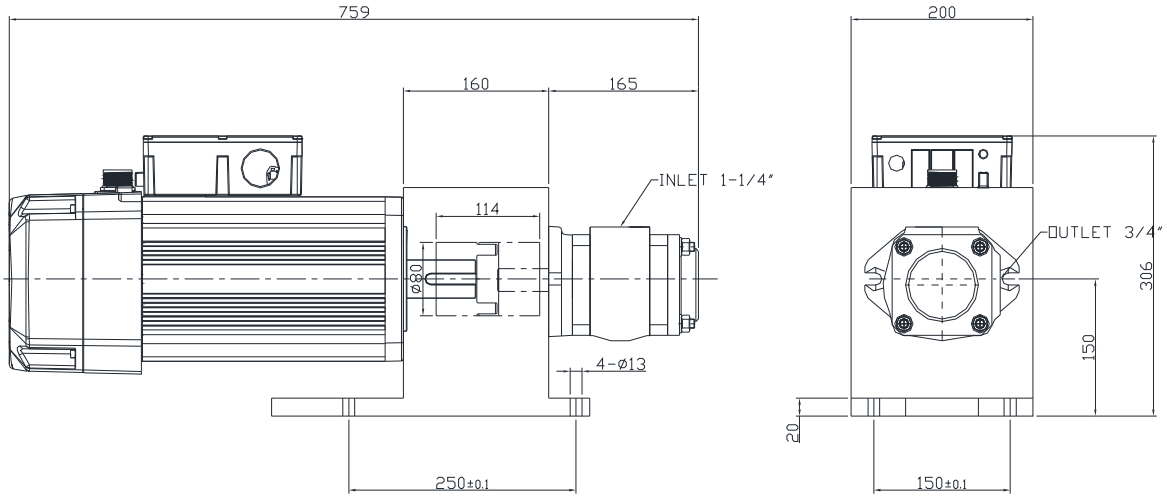


| Component | Model Number | Quantity |
|---|---|---|
| Motor | ECMA-ER181BP3 | 1 |
| Oil pump | EIPC3-025RK23 | 1 |
| Pressure sensor | WIKA A-10 | 1 |

3 **Accessory Kit HESP-063-H-N-23**

| Component | Model Number | Quantity |
|---|---|---|
| ※ Braking resistor | BR1K0W8P3 | 1 |
| Coding device cable 5m | | 1 |
| Magnetic ring of power cable | | 1 |
| Sensor clamp | | 1 |

※ Braking resistor 1000W 8.3Ω Unit: min

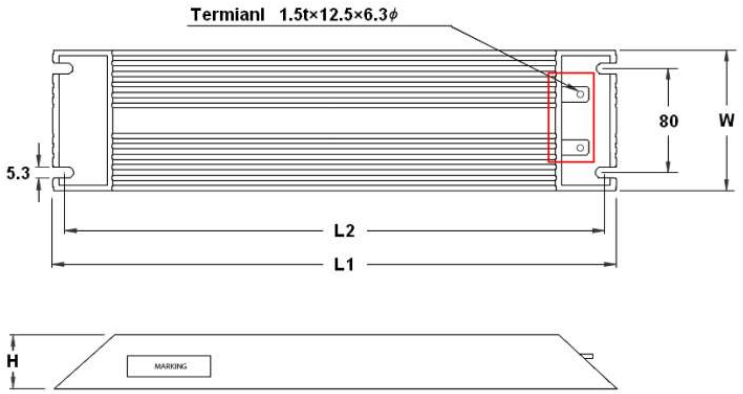


| TYPE | L1 ± 2 | L2 ± 2 | W ± 1 | H ± 1 |
|---|---|---|---|---|
| MH 1000 W | 400 | 385 | 100 | 50 |

## HES080G23A

1 Servo controller VFD110VL23A08GA, corresponding PG card EMVJ-PG02R

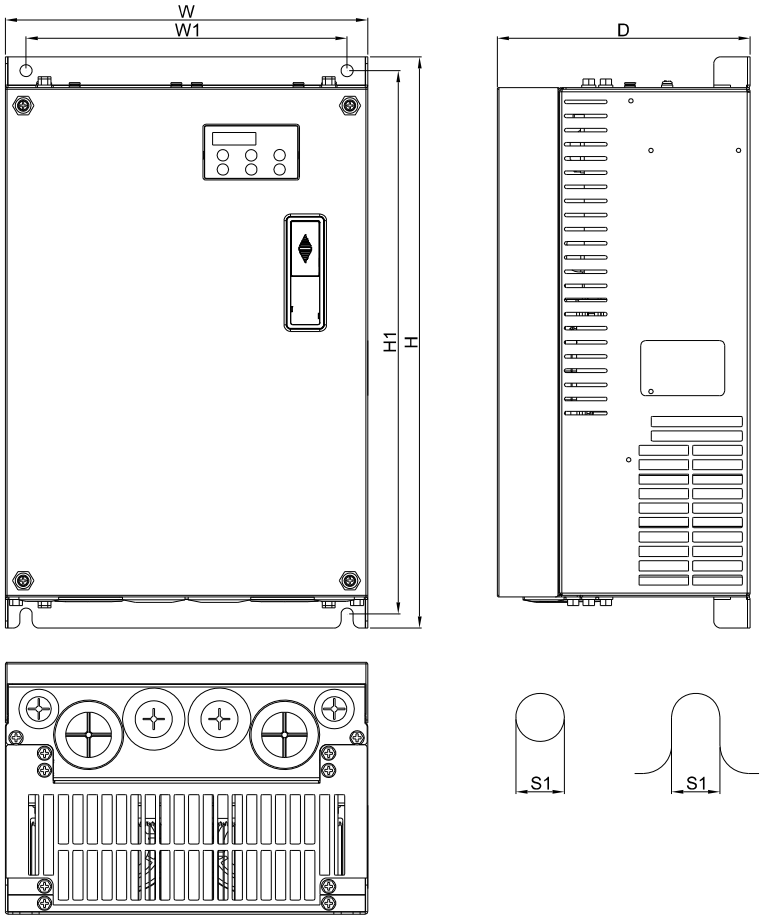


Unit: mm[inch]

| Frame | W | W1 | H | H1 | D | S1 |
|---|---|---|---|---|---|---|
| C | 235.0 [9.25] | 204.0 [8.03] | 350.0 [13.78] | 337.0 [13.27] | 146.0 [5.75] | 6.5 [0.26] |

2 Servo oil pump HSP-032-110-23A

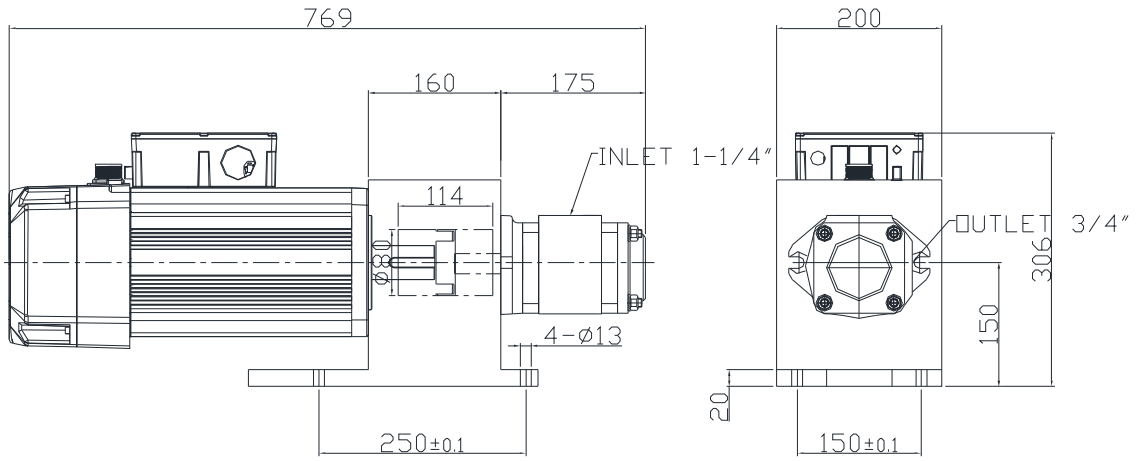


| Component | Model Number | Quantity |
|---|---|---|
| Motor | ECMA-ER181BP3 | 1 |
| Oil pump | EIPC3-032RK23 | 1 |
| Pressure sensor | WIKA A-10 | 1 |

3 **Accessory Kit HESP-080-G-N-23**

| Component | Model Number | Quantity |
|---|---|---|
| ※ Braking resistor | BR1K0W8P3 | 1 |
| Coding device cable 5m | | 1 |
| Magnetic ring of power cable | | 1 |
| Sensor clamp | | 1 |

※ Braking resistor 1000W 8.3Ω Unit: min

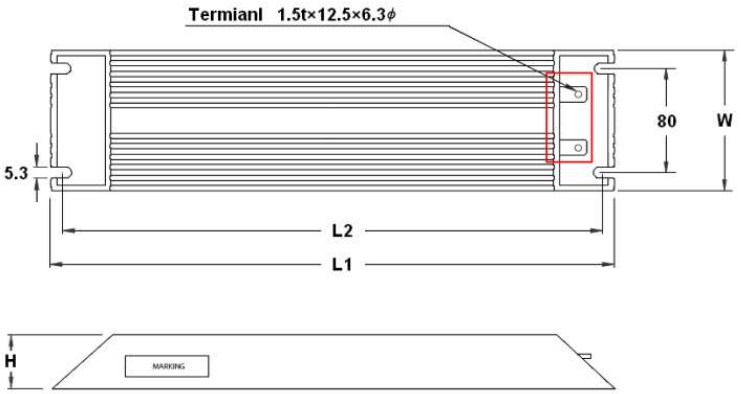


| TYPE | L1 ± 2 | L2 ± 2 | W ± 1 | H ± 1 |
|---|---|---|---|---|
| MH 1000 W | 400 | 385 | 100 | 50 |

## HES080H23A

1 Servo controller VFD150VL23A08HA, corresponding PG card EMVJ-PG02R

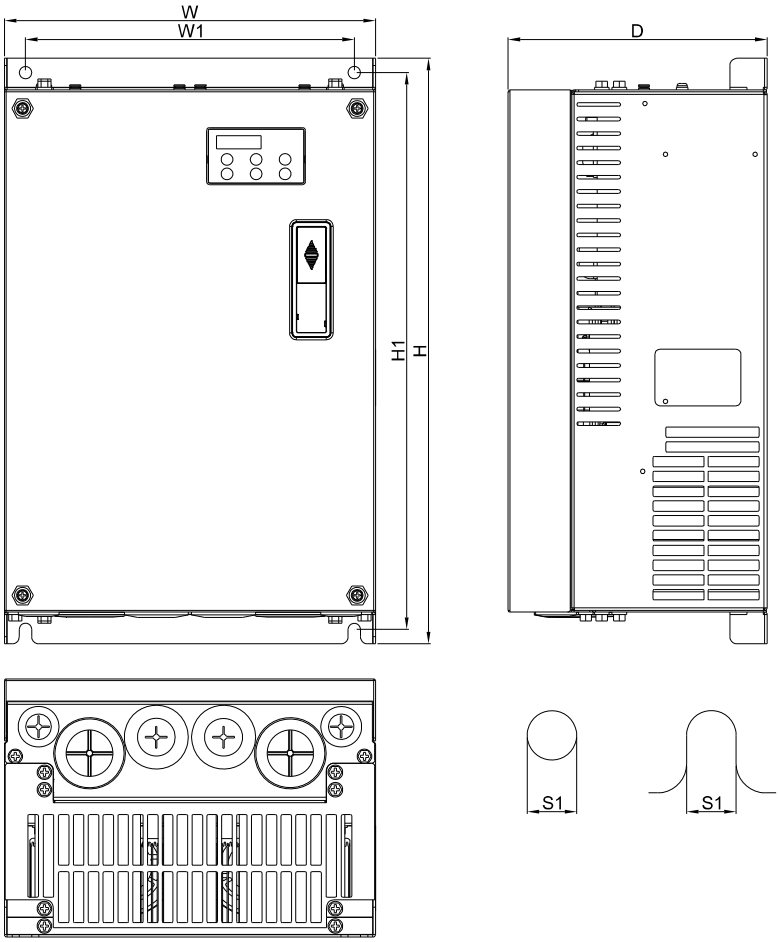


Unit: mm[inch]

| Frame | W | W1 | H | H1 | D | S1 |
|---|---|---|---|---|---|---|
| **D** | 255.0 [10.04] | 226.0 [8.90] | 403.8 [15.90] | 384.0 [15.12] | 168.0 [6.61] | 8.5 [0.33] |

2 Servo oil pump HSP-032-110-23A

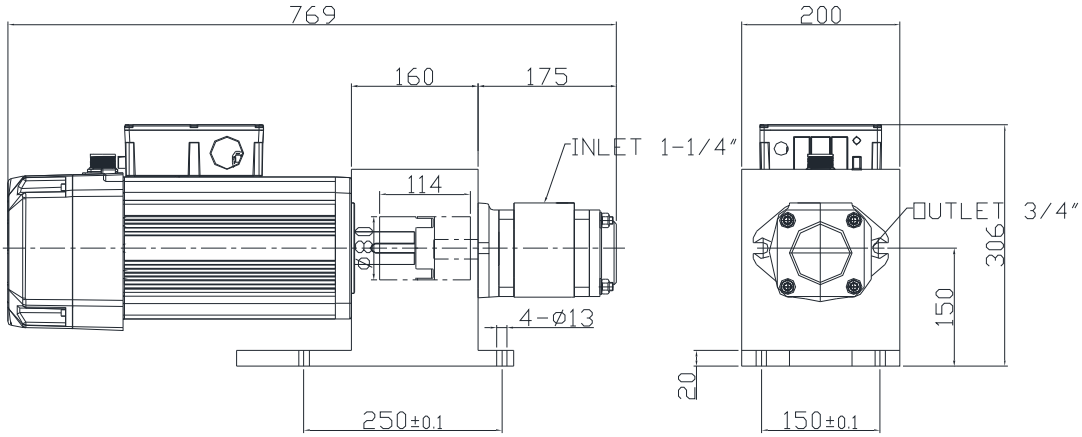


| Component | Model Number | Quantity |
|---|---|---|
| Motor | ECMA-ER181BP3 | 1 |
| Oil pump | EIPC3-032RK23 | 1 |
| Pressure sensor | WIKA A-10 | 1 |

3 **Accessory Kit HESP-080-H-N-23**

| Component | Model Number | Quantity |
|---|---|---|
| ※ Braking resistor | BR1K0W5P8 | 1 |
| Coding device cable 5m | | 1 |
| Magnetic ring of power cable | | 1 |
| Sensor clamp | | 1 |

※ Braking resistor 1000W 5.8Ω Unit: min

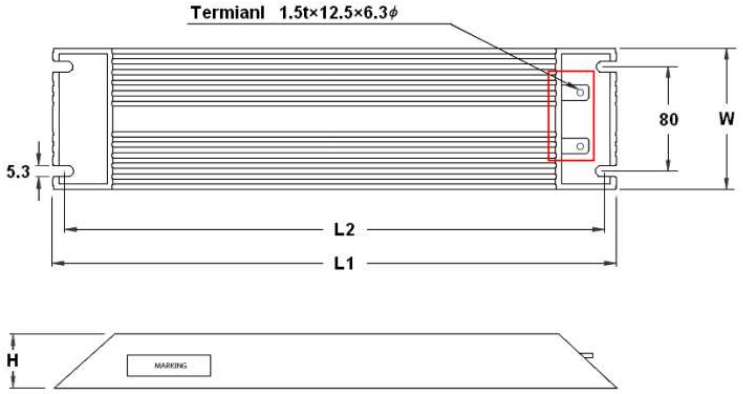


| TYPE | L1 ± 2 | L2 ± 2 | W ± 1 | H ± 1 |
|---|---|---|---|---|
| MH 1000 W | 400 | 385 | 100 | 50 |

## HES100G23A

1 Servo controller VFD150VL23A10GA, corresponding PG card EMVJ-PG02R

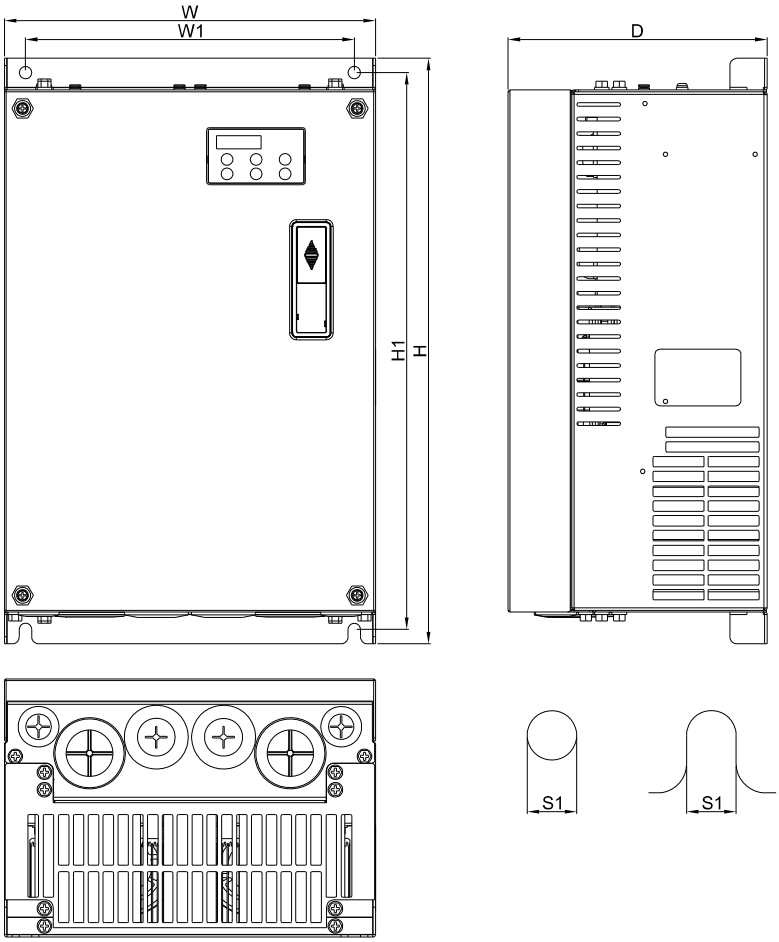


Unit: mm[inch]

| Frame | W | W1 | H | H1 | D | S1 |
|---|---|---|---|---|---|---|
| **D** | 255.0 [10.04] | 226.0 [8.90] | 403.8 [15.90] | 384.0 [15.12] | 168.0 [6.61] | 8.5 [0.33] |

2 Servo oil pump HSP-040-110-23A

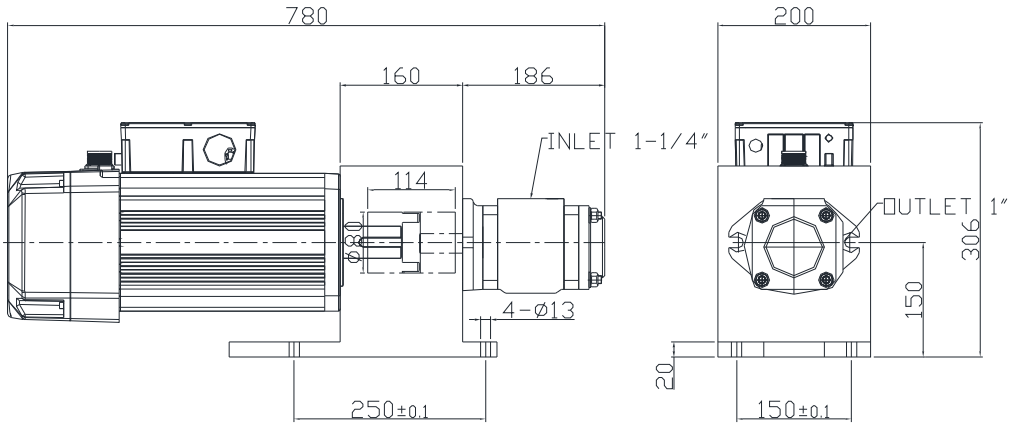


| Component | Model Number | Quantity |
|---|---|---|
| Motor | ECMA-ER181BP3 | 1 |
| Oil pump | EIPC3-040RK23 | 1 |
| Pressure sensor | WIKA A-10 | 1 |

3 **Accessory Kit HESP-100-G-N-23**

| Component | Model Number | Quantity |
|---|---|---|
| ※ Braking resistor | BR1K0W5P8 | 1 |
| Coding device cable 5m | | 1 |
| Magnetic ring of power cable | | 1 |
| Sensor clamp | | 1 |

※ Braking resistor 1000W 5.8Ω Unit: min

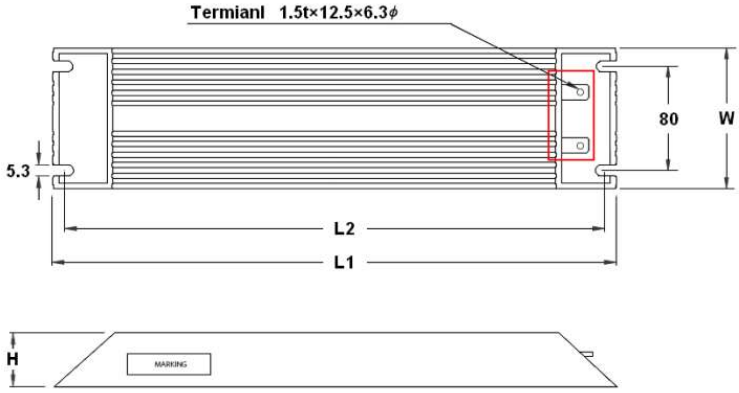


| TYPE | L1 ± 2 | L2 ± 2 | W ± 1 | H ± 1 |
|---|---|---|---|---|
| MH 1000 W | 400 | 385 | 100 | 50 |

## HES100H23A

1 Servo controller VFD185VL23A10HA, corresponding PG card EMVJ-PG02R

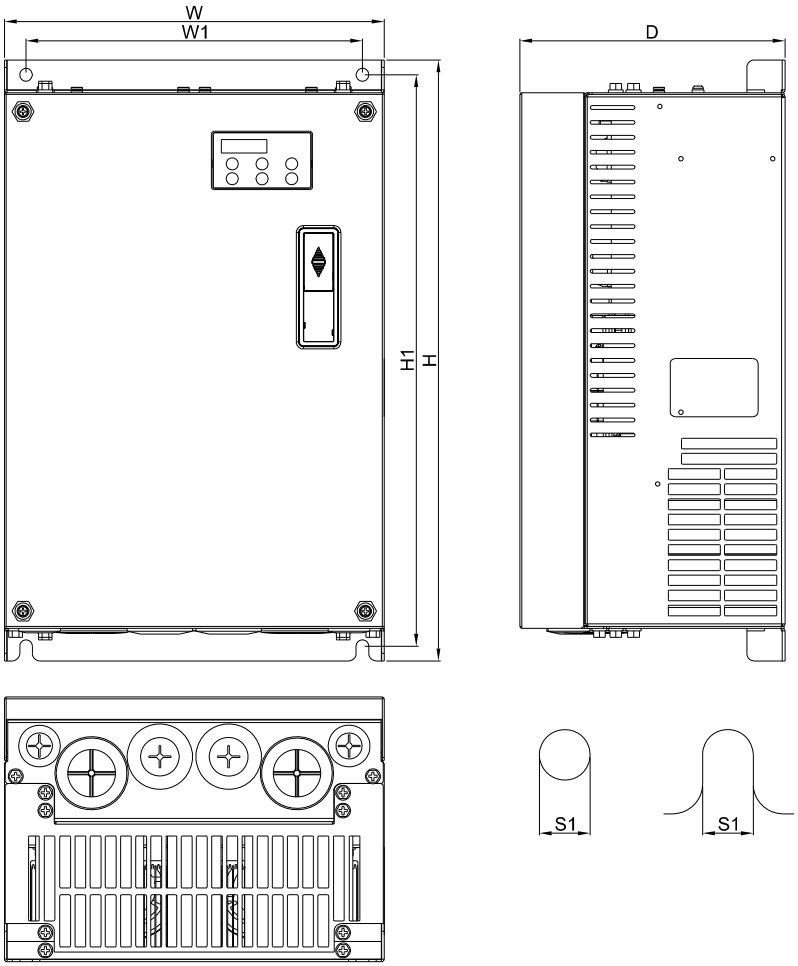


Unit: mm[inch]

| Frame | W | W1 | H | H1 | D | S1 |
|---|---|---|---|---|---|---|
| **D** | 255.0 [10.04] | 226.0 [8.90] | 403.8 [15.90] | 384.0 [15.12] | 168.0 [6.61] | 8.5 [0.33] |

2 Servo oil pump HSP-040-110-23A

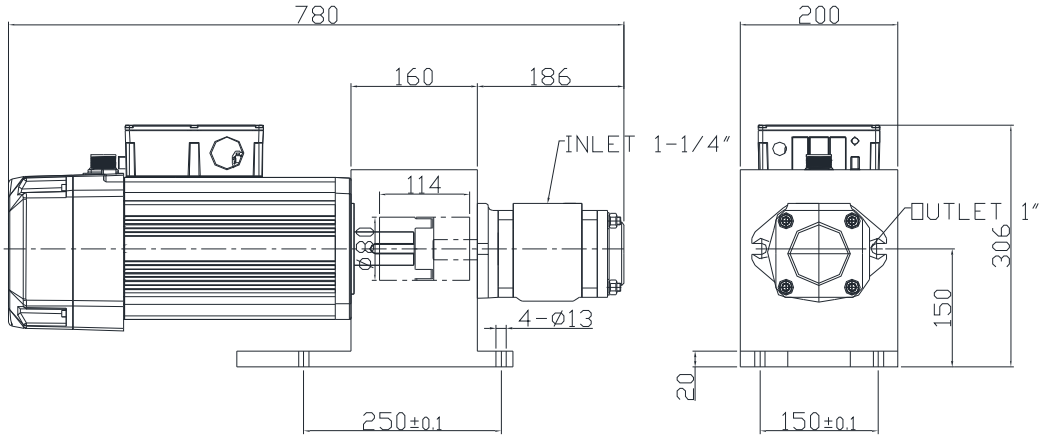


| Component | Model Number | Quantity |
|---|---|---|
| Motor | ECMA-ER181BP3 | 1 |
| Oil pump | EIPC3-040RK23 | 1 |
| Pressure sensor | WIKA A-10 | 1 |

3 **Accessory Kit HESP-100-H-N-23**

| Component | Model Number | Quantity |
|---|---|---|
| ※ Braking resistor | BR1K0W5P8 | 1 |
| Coding device cable 5m | | 1 |
| Magnetic ring of power cable | | 1 |
| Sensor clamp | | 1 |

※ Braking resistor 1000W 5.8Ω Unit: min

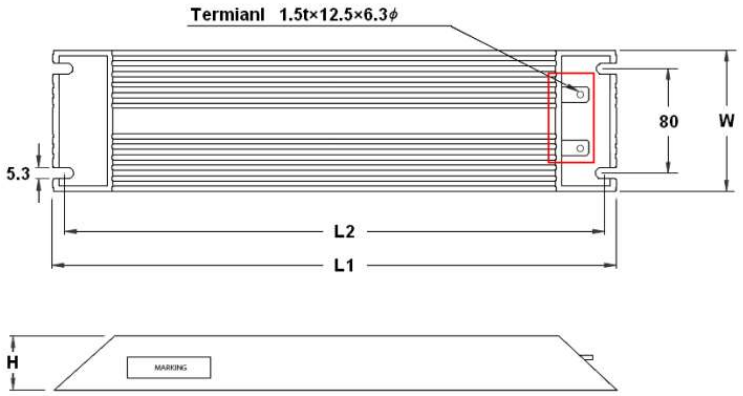


| TYPE | L1 ± 2 | L2 ± 2 | W ± 1 | H ± 1 |
|---|---|---|---|---|
| MH 1000 W | 400 | 385 | 100 | 50 |

## HES100Z23A

1 Servo controller VFD220VL23A10ZA, corresponding PG card EMVJ-PG02R

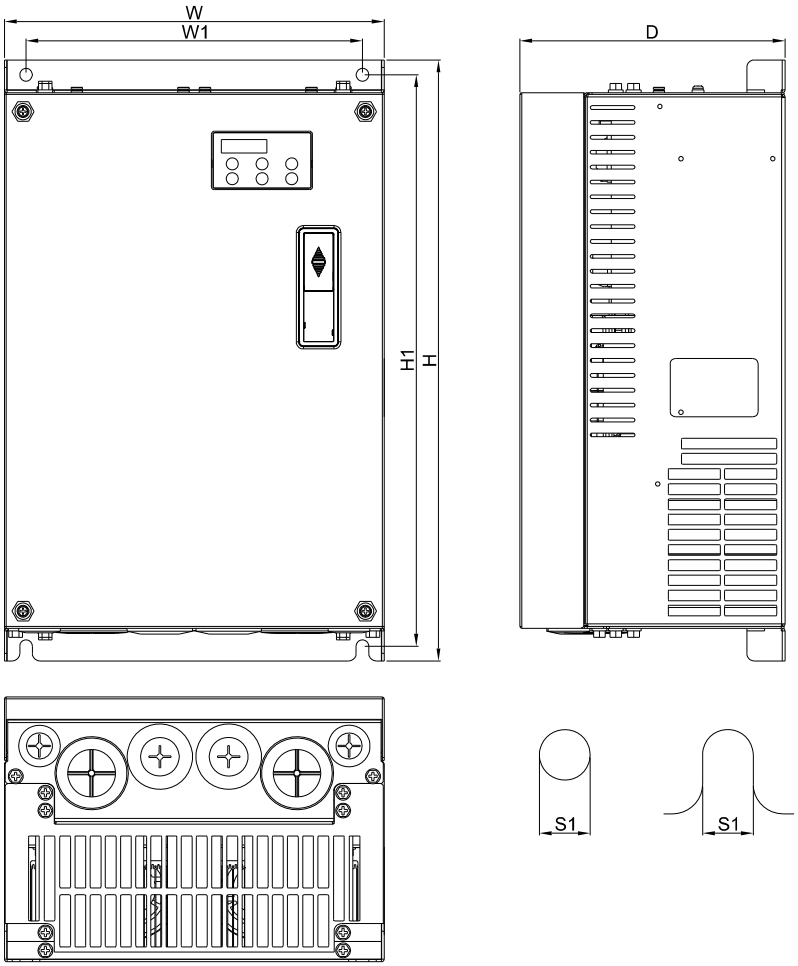


Unit: mm[inch]

| Frame | W | W1 | H | H1 | D | S1 |
|---|---|---|---|---|---|---|
| **D** | 255.0 [10.04] | 226.0 [8.90] | 403.8 [15.90] | 384.0 [15.12] | 168.0 [6.61] | 8.5 [0.33] |

2 Servo oil pump HSP-040-150-23A

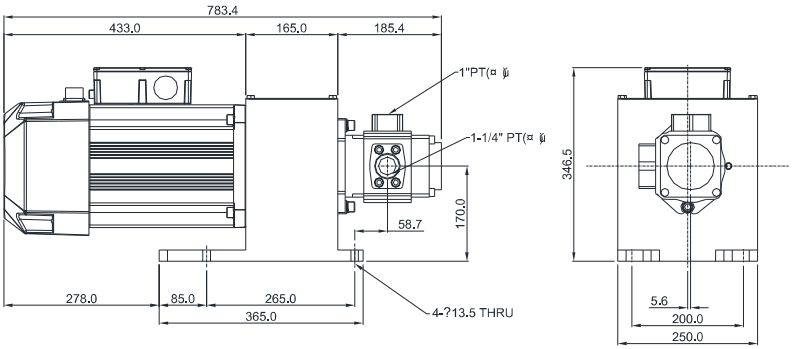


| Component | Model Number | Quantity |
|---|---|---|
| Motor | ECMA-ER221FPS | 1 |
| Oil pump | EIPC3-040RA23 | 1 |
| Pressure sensor | WIKA A-10 | 1 |

3 **Accessory Kit HESP-100-Z-N-23**

| Component | Model Number | Quantity |
|---|---|---|
| ※ Braking resistor | BR1K0W5P8 | 1 |
| Coding device cable 5m | | 1 |
| Magnetic ring of power cable | | 1 |
| Sensor clamp | | 1 |

※ Braking resistor 1000W 5.8Ω Unit: min

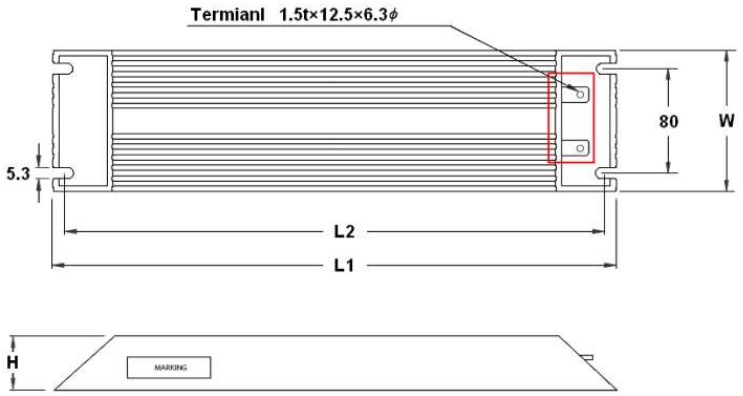


| TYPE | L1 ± 2 | L2 ± 2 | W ± 1 | H ± 1 |
|---|---|---|---|---|
| MH 1000 W | 400 | 385 | 100 | 50 |

## HES125G23A

1 Servo controller VFD220VL23A12GA, corresponding PG card EMVJ-PG02R

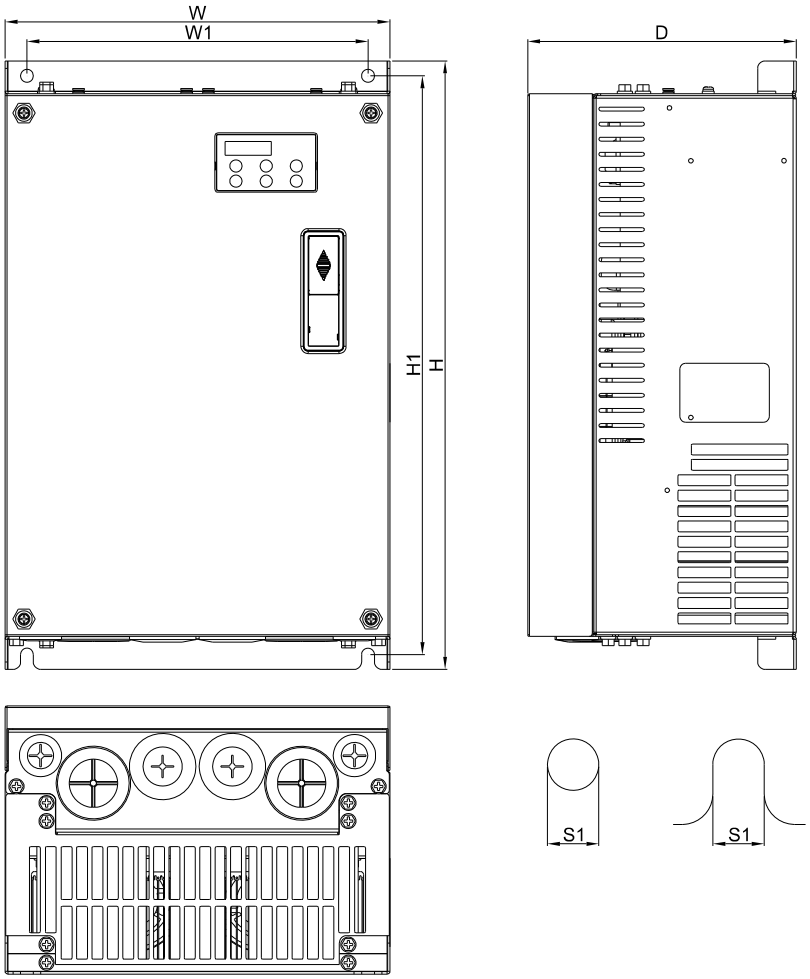


Unit: mm[inch]

| Frame | W | W1 | H | H1 | D | S1 |
|---|---|---|---|---|---|---|
| **D** | 255.0 [10.04] | 226.0 [8.90] | 403.8 [15.90] | 384.0 [15.12] | 168.0 [6.61] | 8.5 [0.33] |

2 Servo oil pump HSP-050-150-23A

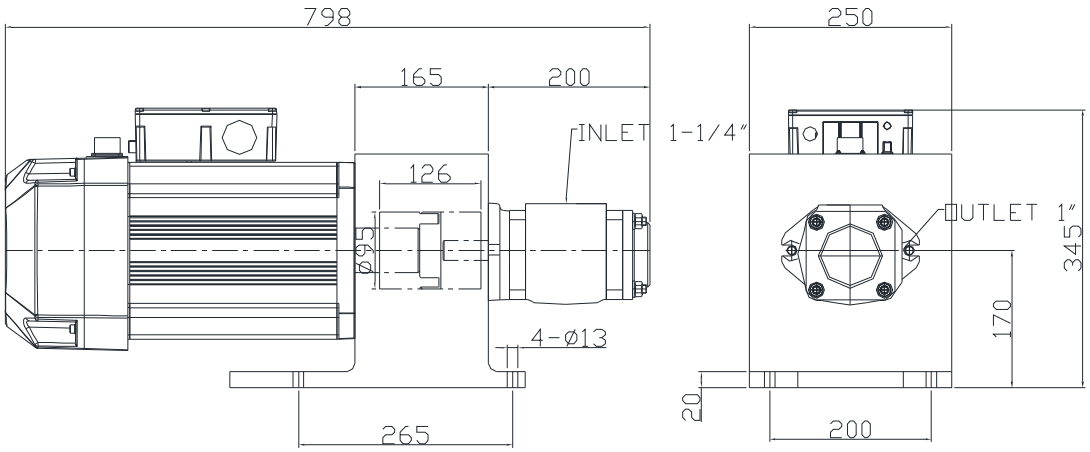


| Component | Model Number | Quantity |
|---|---|---|
| Motor | ECMA-ER221FPS | 1 |
| Oil pump | EIPC3-050RK23 | 1 |
| Pressure sensor | WIKA A-10 | 1 |

3 **Accessory** Kit HESP-125-G-N-23

| Component | Model Number | Quantity |
|---|---|---|
| ※ Braking resistor | BR1K0W5P8 | 1 |
| Coding device cable 5m | | 1 |
| Magnetic ring of power cable | | 1 |
| Sensor clamp | | 1 |

※ Braking resistor 1000W 5.8Ω Unit: min

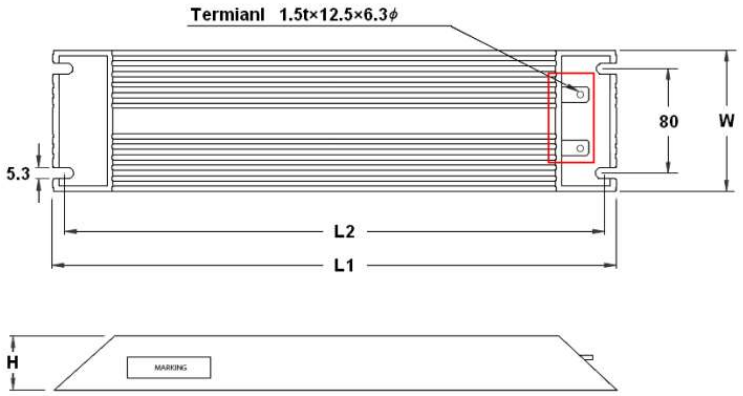


| TYPE | L1 ± 2 | L2 ± 2 | W ± 1 | H ± 1 |
|---|---|---|---|---|
| MH 1000 W | 400 | 385 | 100 | 50 |

## HES125H23A

1 Servo controller VFD300VL23A12HA, corresponding PG card EMVJ-PG02R

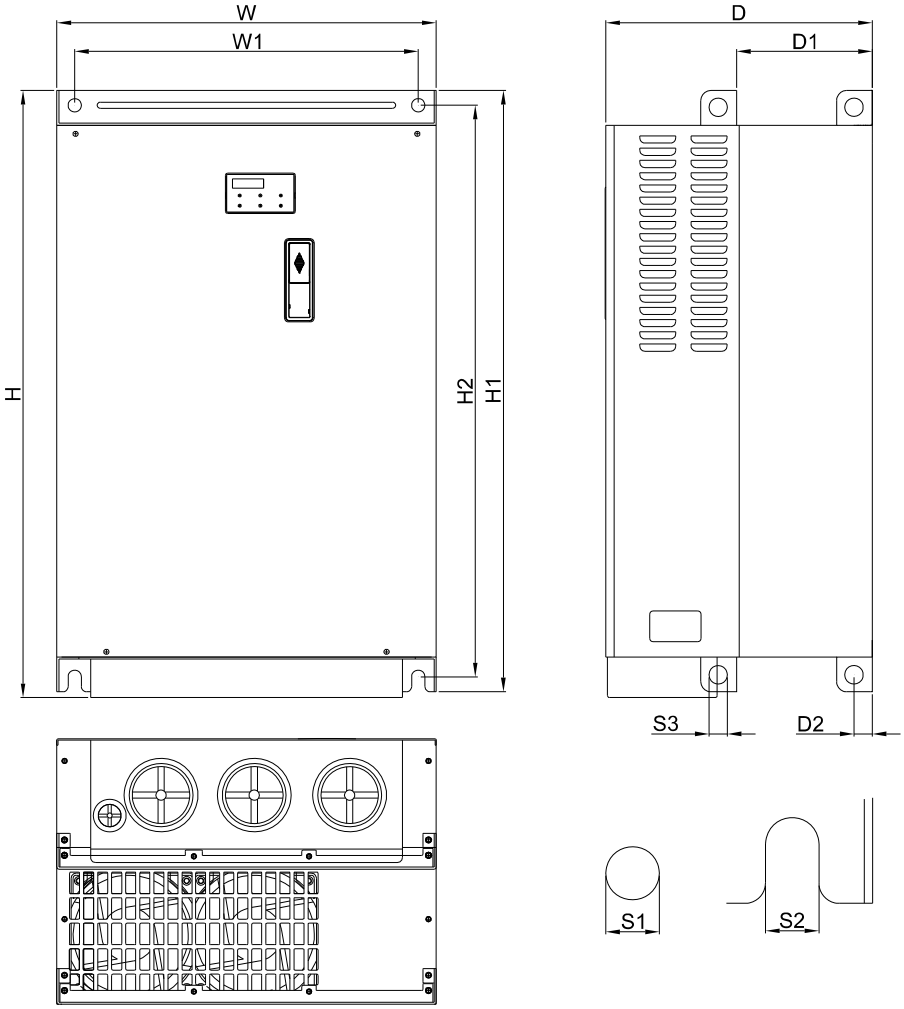


Unit: mm[inch]

| Frame | W | W1 | H | H1 | H2 | D | D1 | D2 | S1 | S2 | S3 |
|---|---|---|---|---|---|---|---|---|---|---|---|
| **E2** | 370.0 [14.57] | 335.0 [13.19] | 595.0 [23.43] | 589.0 [23.19] | 560.0 [22.05] | 260.0 [10.24] | 132.5 [5.22] | 18.0 [0.71] | 13.0 [0.51] | 13.0 [0.51] | 18.0 [0.71] |

2 Servo oil pump HSP-050-150-23A

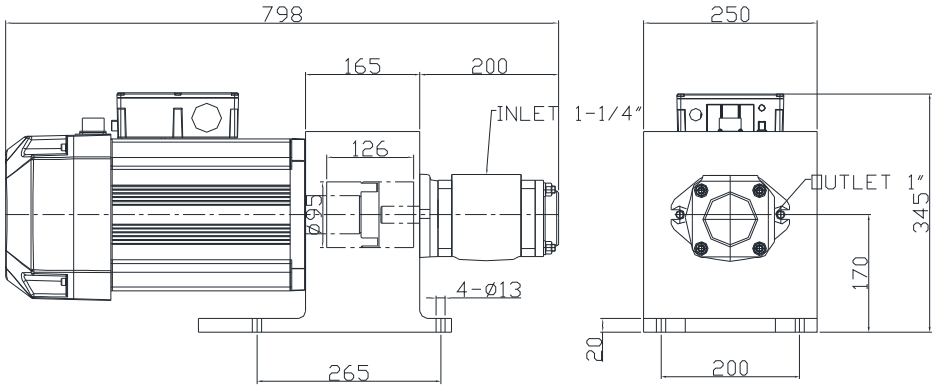


| Component | Model Number | Quantity |
|---|---|---|
| Motor | ECMA-ER221FPS | 1 |
| Oil pump | EIPC3-050RK23 | 1 |
| Pressure sensor | WIKA A-10 | 1 |

3 **Accessory Kit HESP-125-H-B-23**

| Component | Model Number | Quantity |
|---|---|---|
| ※1 Braking unit | VFDB-2022 | 1 |
| ※2 Braking resistor | BR1K0W5P8 | 1 |

| Coding device cable 5m*1 | Magnetic ring of power cable*3 | Sensor clamp*1 |
|---|---|---|
| | | |

※1 Braking unit VFDB-2022

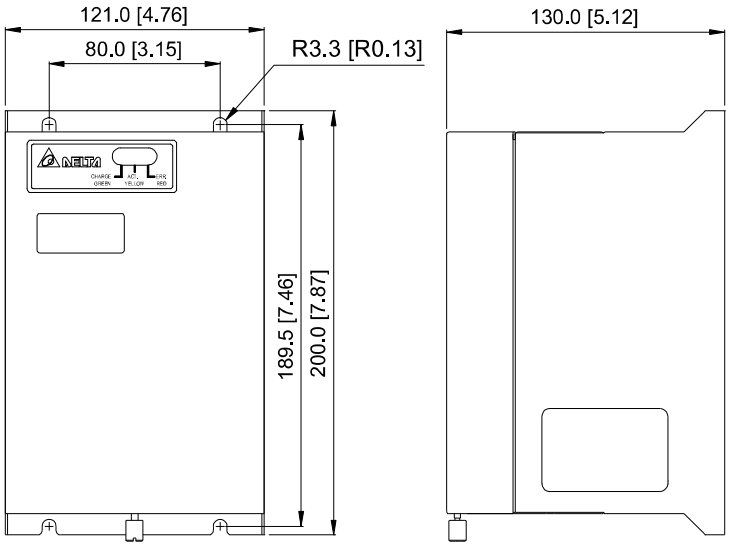


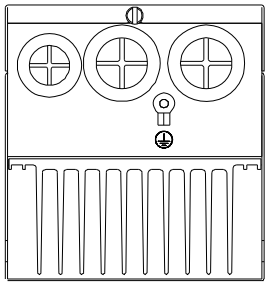

※ 2 Braking resistor 1000W 5.8Ω Unit: min

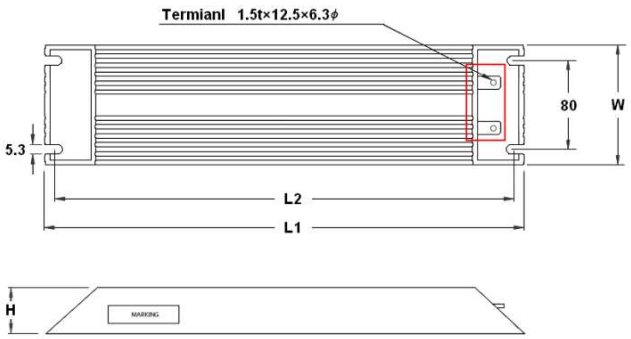


| TYPE | L1 ± 2 | L2 ± 2 | W ± 1 | H ± 1 |
|---|---|---|---|---|
| MH 1000 W | 400 | 385 | 100 | 50 |

## HES160G23A

1 Servo controller VFD300VL23A16GA, corresponding PG card EMVJ-PG02R

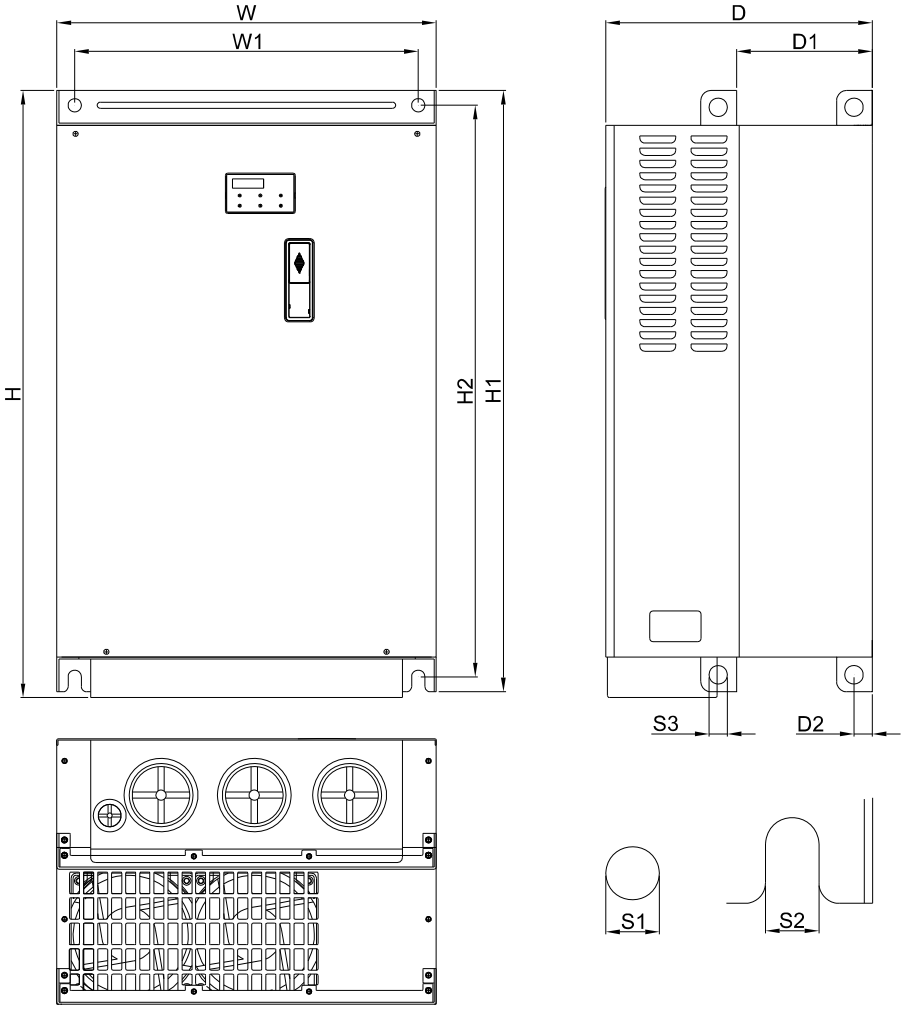


Unit: mm[inch]

| Frame | W | W1 | H | H1 | H2 | D | D1 | D2 | S1 | S2 | S3 |
|---|---|---|---|---|---|---|---|---|---|---|---|
| **E2** | 370.0 [14.57] | 335.0 [13.19] | 595.0 [23.43] | 589.0 [23.19] | 560.0 [22.05] | 260.0 [10.24] | 132.5 [5.22] | 18.0 [0.71] | 13.0 [0.51] | 13.0 [0.51] | 18.0 [0.71] |

2 Servo oil pump HSP-064-150-23A

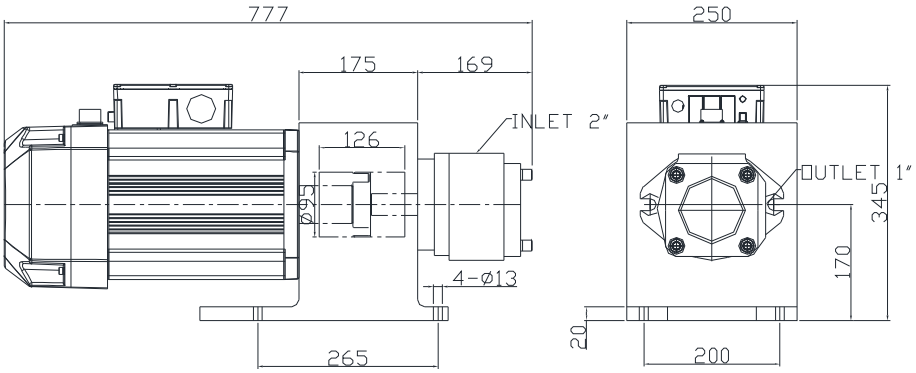


| Component | Model Number | Quantity |
|---|---|---|
| Motor | ECMA-ER221FPS | 1 |
| Oil pump | EIPC3-064RK23 | 1 |
| Pressure sensor | WIKA A-10 | 1 |

3 **Accessory Kit HESP-160-G-B-23**

| Component | Model Number | Quantity |
|---|---|---|
| ※1 Braking unit | VFDB-2022 | 1 |
| ※2 Braking resistor | BR1K0W5P8 | 1 |

| Coding device cable 5m*1 | Magnetic ring of power cable*3 | Sensor clamp*1 |
|---|---|---|
| | | |

※1 Braking unit VFDB-2022

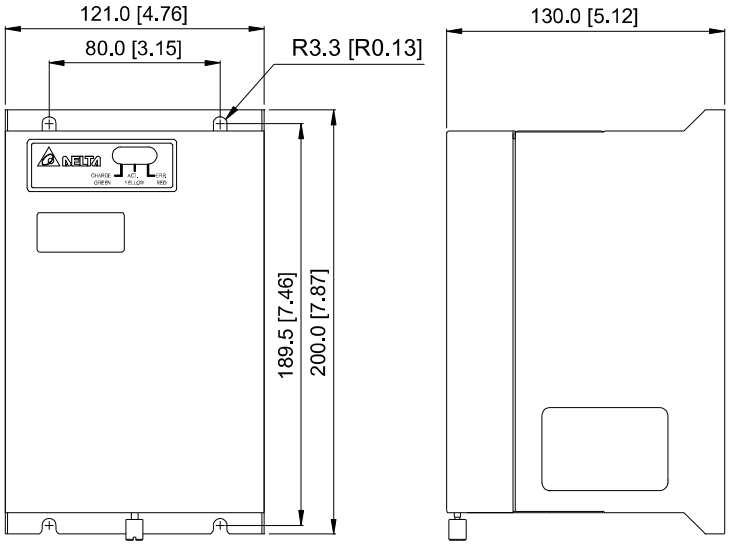


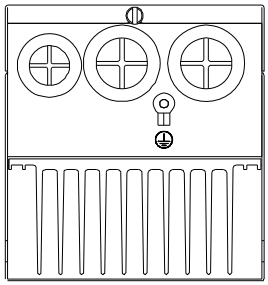

※2 Braking resistor 1000W 5.8Ω Unit: min

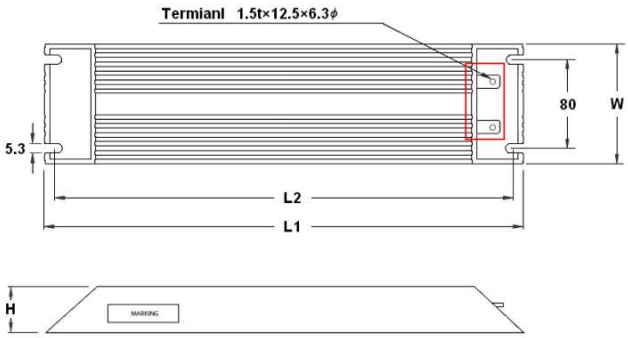


| TYPE | L1 ± 2 | L2 ± 2 | W ± 1 | H ± 1 |
|---|---|---|---|---|
| MH 1000 W | 400 | 385 | 100 | 50 |

## HES160H23A

1 Servo controller VFD370VL23A16HA, corresponding PG card EMVJ-PG02R

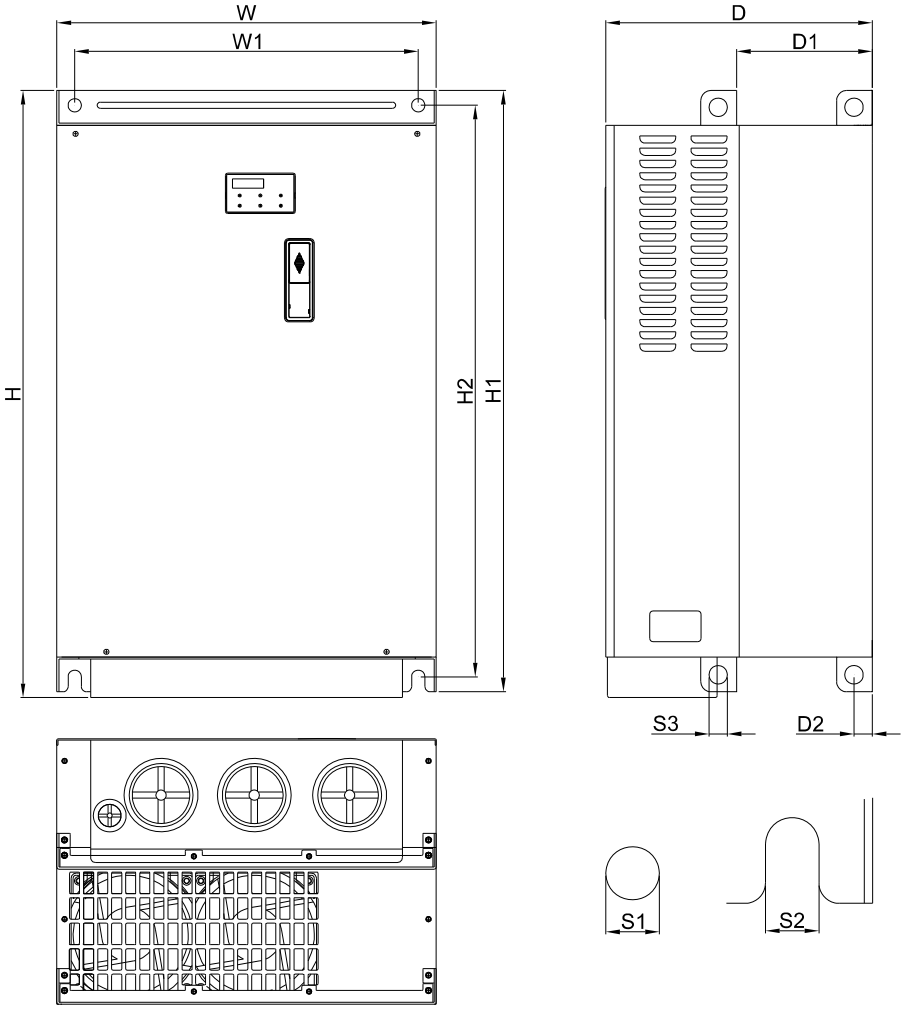


Unit: mm[inch]

| Frame | W | W1 | H | H1 | H2 | D | D1 | D2 | S1 | S2 | S3 |
|---|---|---|---|---|---|---|---|---|---|---|---|
| **E2** | 370.0 [14.57] | 335.0 [13.19] | 595.0 [23.43] | 589.0 [23.19] | 560.0 [22.05] | 260.0 [10.24] | 132.5 [5.22] | 18.0 [0. 1] | 13.0 [0.51] | 13.0 [0.51] | 18.0 [0.71] |

2 Servo oil pump HSP-064-200-23A

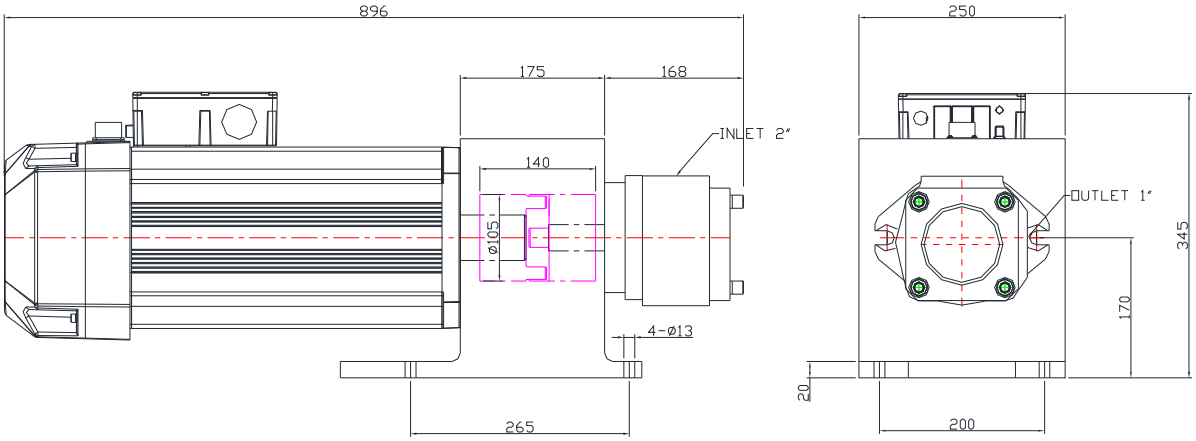


| Component | Model Number | Quantity |
|---|---|---|
| Motor | ECMA-ER222APS | 1 |
| Oil pump | EIPC3-064RA23 | 1 |
| Pressure sensor | WIKA A-10 | 1 |

3 **Accessory Kit HESP-160-H-B-23**

| Component | Model Number | Quantity |
|---|---|---|
| ※1 Braking unit | VFDB-2022 | 1 |
| ※2 Braking resistor | BR1K0W5P8 | 1 |

| Coding device cable 5m*1 | Magnetic ring of power cable*3 | Sensor clamp*1 |
|---|---|---|
| | | |

※1 Braking unit VFDB-2022

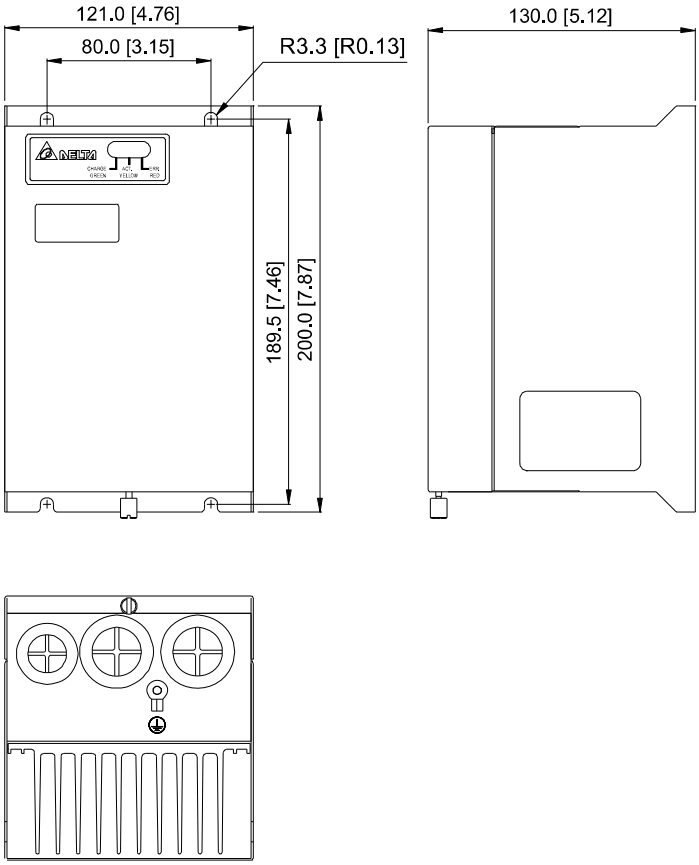


※2 Braking resistor 1000W 5.8Ω Unit: min

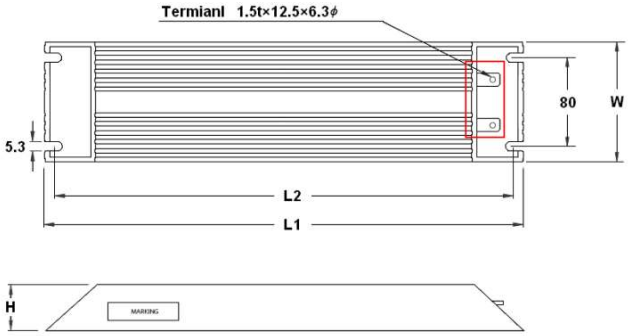


| TYPE | L1 ± 2 | L2 ± 2 | W ± 1 | H ± 1 |
|---|---|---|---|---|
| MH 1000 W | 400 | 385 | 100 | 50 |

## HES200G23A

1 Servo controller VFD370VL23A20GA, corresponding PG card EMVJ-PG02R

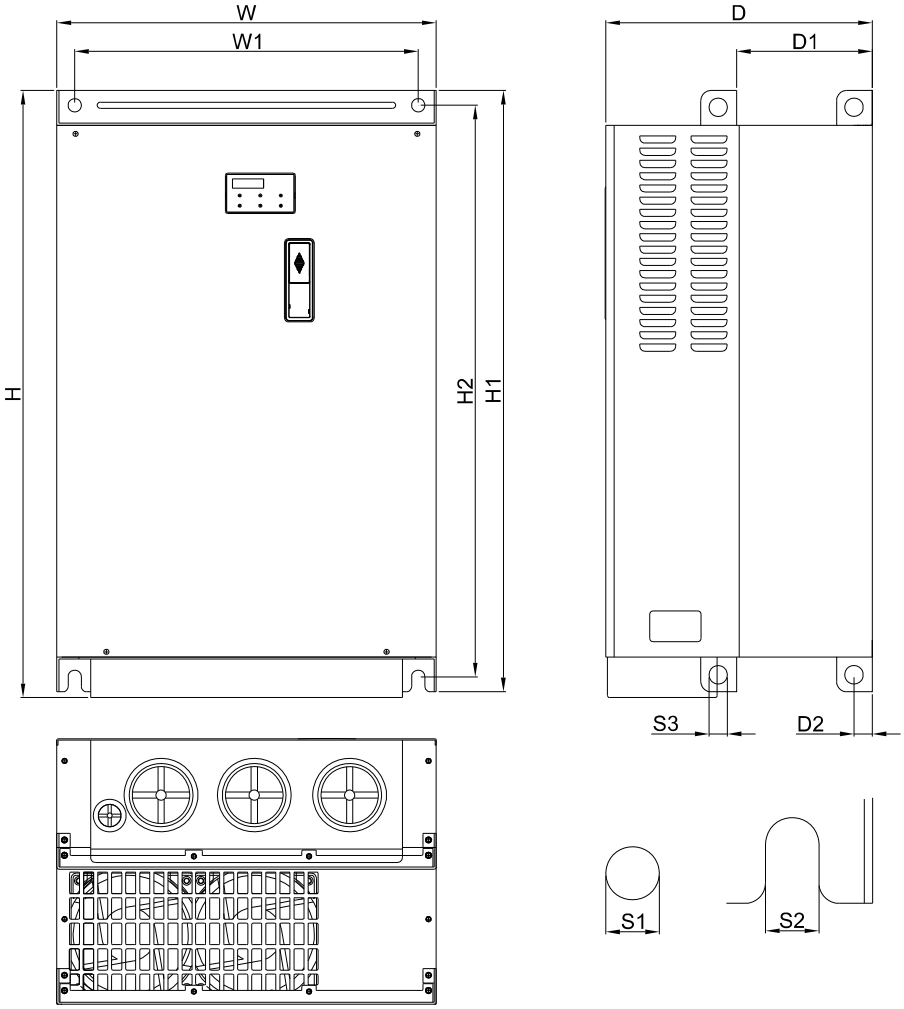


Unit: mm[inch]

| Frame | W | W1 | H | H1 | H2 | D | D1 | D2 | S1 | S2 | S3 |
|---|---|---|---|---|---|---|---|---|---|---|---|
| **E2** | 370.0 [14.57] | 335.0 [13.19] | 595.0 [23.43] | 589.0 [23.19] | 560.0 [22.05] | 260.0 [10.24] | 132.5 [5.22] | 18.0 [0.71] | 13.0 [0.51] | 13.0 [0.51] | 18.0 [0.71] |

2 Servo oil pump HSP-200-G-B-23

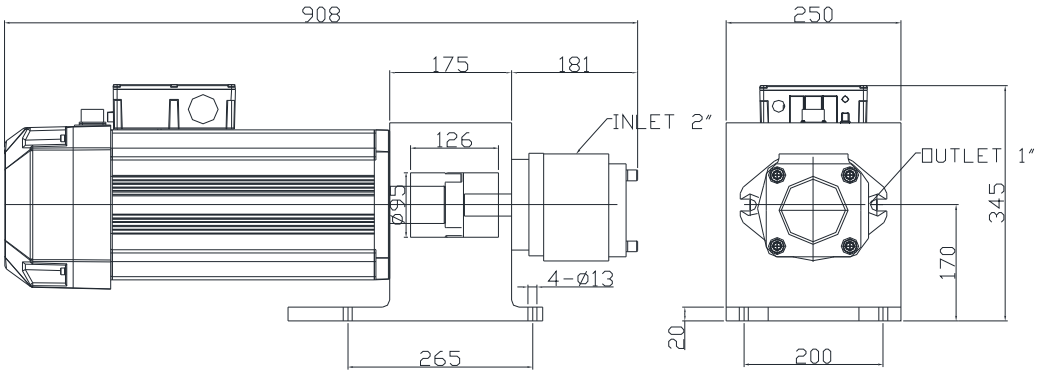


| Component | Model Number | Quantity |
|---|---|---|
| Motor | ECMA-ER222APS | 1 |
| Oil pump | EIPC3-080RA23 | 1 |
| Pressure sensor | WIKA A-10 | 1 |

3 **Accessory Kit HESP-200-G-B-23**

| Component | Model Number | Quantity |
|---|---|---|
| ※1 Braking unit | VFDB-2022 | 1 |
| ※2 Braking resistor | BR1K5W5P8 | 1 |

| Coding device cable 5m*1 | Magnetic ring of power cable*3 | Sensor clamp*1 |
|---|---|---|
| | | |

※1 Braking unit VFDB-2022

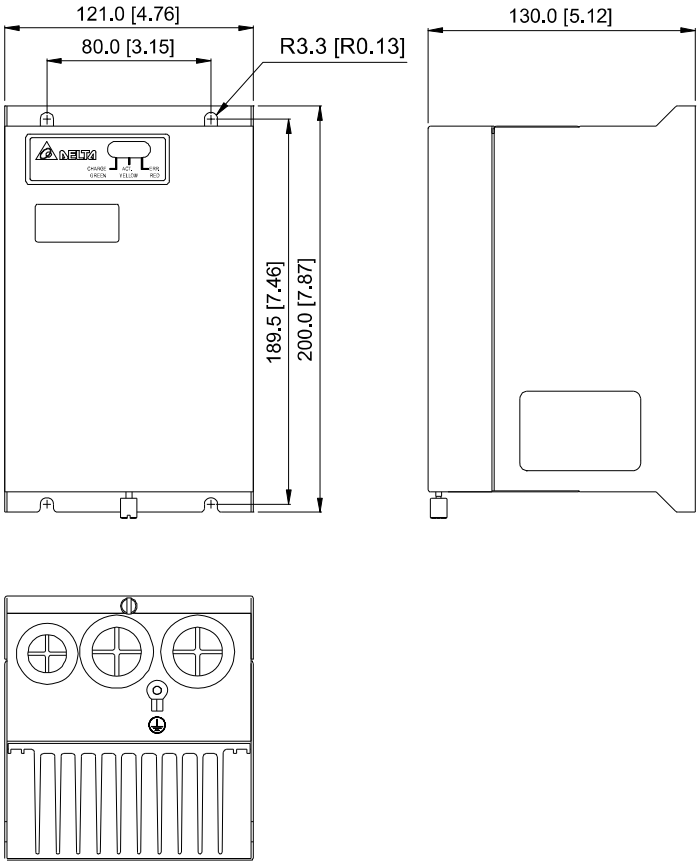


※2 Braking resistor 1500W 5.8Ω Unit: min

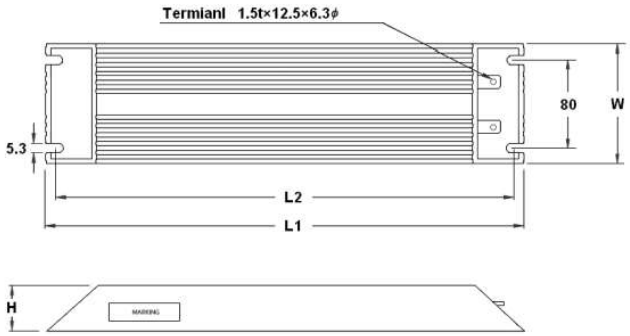


| TYPE | L1 ± 2 | L2 ± 2 | H ± 1 | W ± 1 |
|---|---|---|---|---|
| MH 1500 W | 550 | 535 | 50 | 100 |

## HES063G43A

1 Servo controller VFD110VL43A06GA, corresponding PG card EMVJ-PG02R

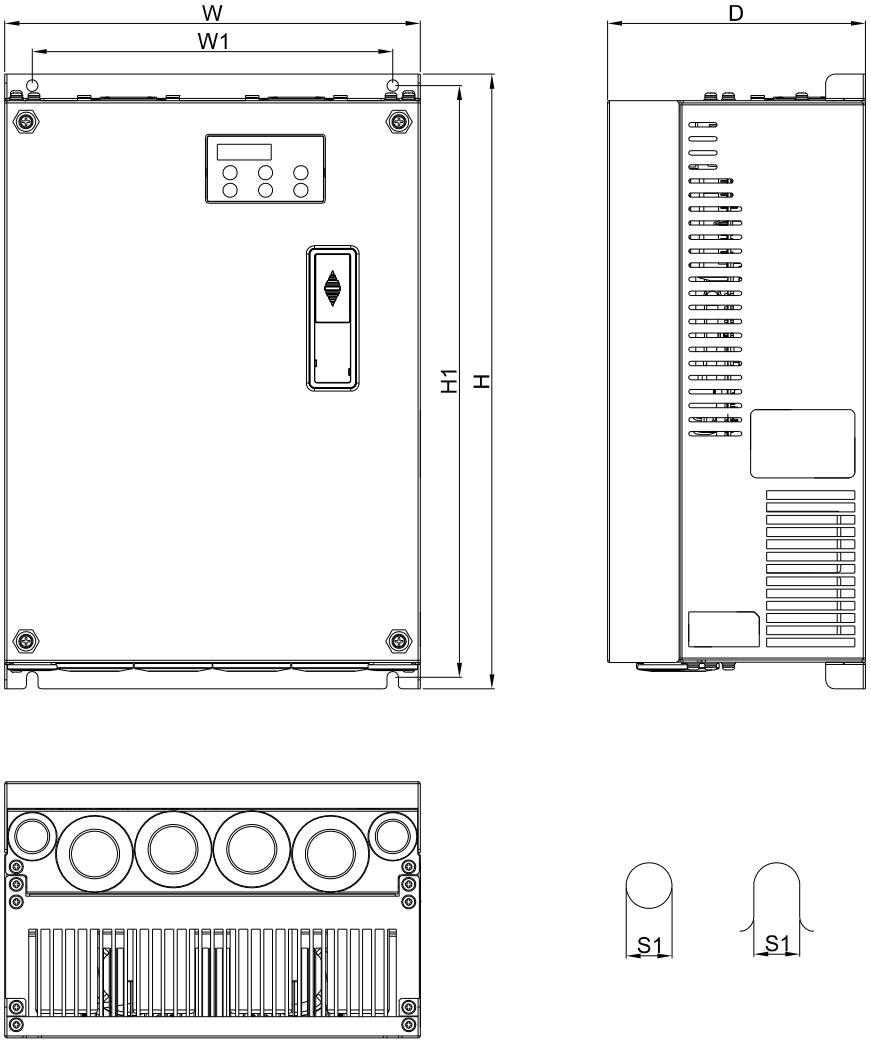


Unit: mm[inch]

| Frame | W | W1 | H | H1 | D | S1 |
|---|---|---|---|---|---|---|
| **C** | 235.0 [9.25] | 204.0 [8.03] | 350.0 [13.78] | 337.0 [13.27] | 146.0 [5.75] | 6.5 [0.26] |

2 Servo oil pump HSP-025-110-43A

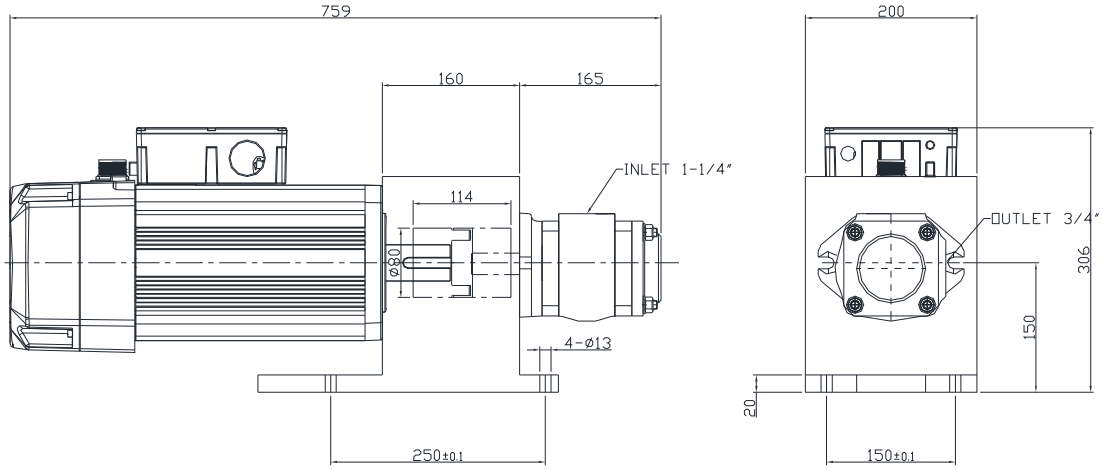


| Component | Model Number | Quantity |
|---|---|---|
| Motor | ECMA-KR181BP3 | 1 |
| Oil pump | EIPC3-025RK23 | 1 |
| Pressure sensor | WIKA A-10 | 1 |

3 **Accessory Kit HESP-063-G-N-43**

| Component | Model Number | Quantity |
|---|---|---|
| ※ Braking resistor | BR1K0W025 | 1 |
| Coding device cable 5m | | 1 |
| Magnetic ring of power cable | | 1 |
| Sensor clamp | | 1 |

※ Braking resistor 1000W 25Ω Unit: min

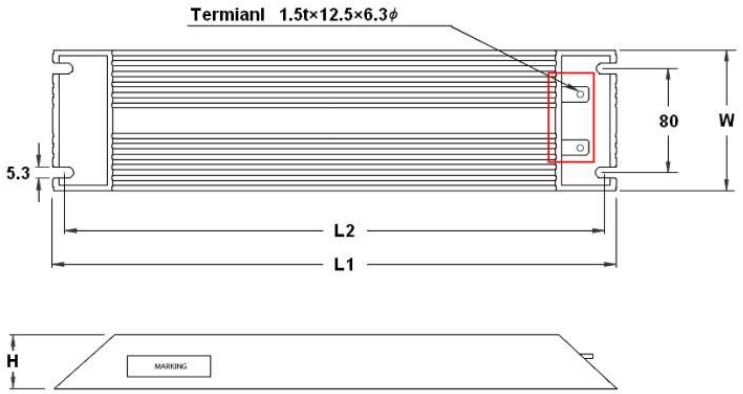


| TYPE | L1 ± 2 | L2 ± 2 | W ± 1 | H ± 1 |
|---|---|---|---|---|
| MH 1000 W | 400 | 385 | 100 | 50 |

## HES063H43A

1 Servo controller VFD150VL43B06HA, corresponding PG card EMVJ-PG02R

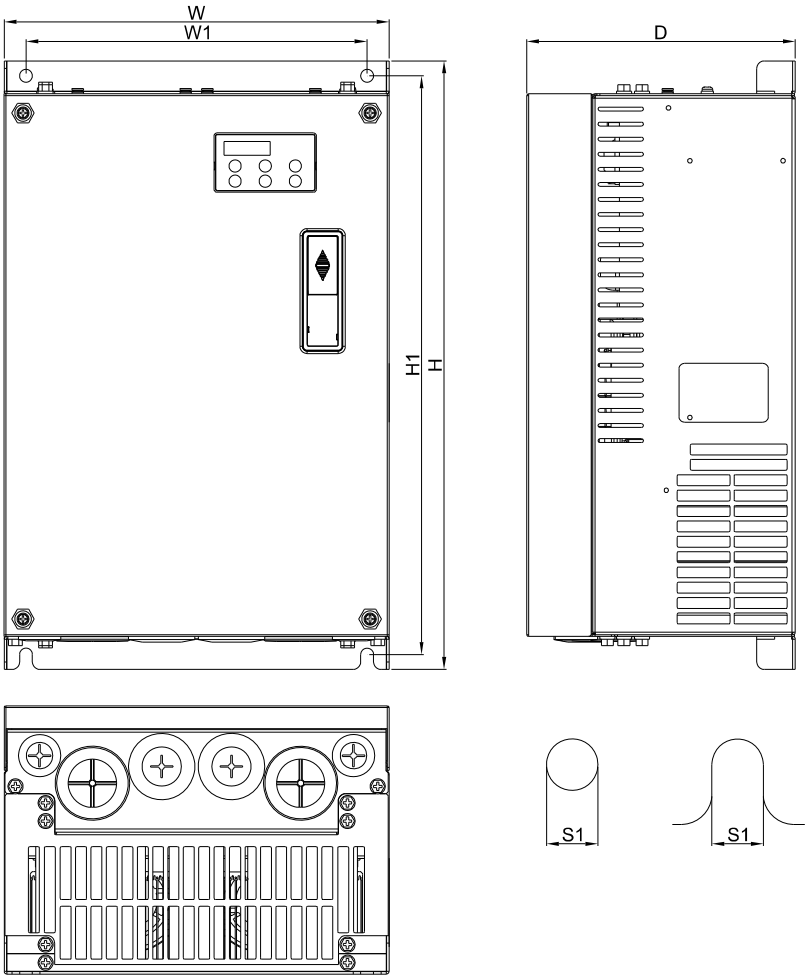


Unit: mm[inch]

| Frame | W | W1 | H | H1 | D | S1 |
|---|---|---|---|---|---|---|
| **C** | 235.0 [9.25] | 204.0 [8.03] | 350.0 [13.78] | 337.0 [13.27] | 146.0 [5.75] | 6.5 [0.26] |

2 Servo oil pump HSP-025-110-43A

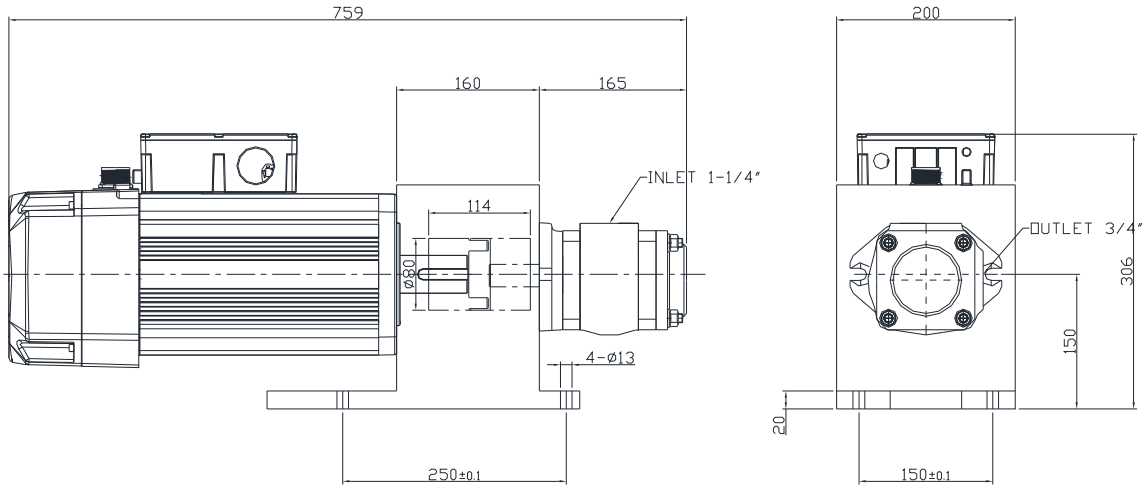


| Component | Model Number | Quantity |
|---|---|---|
| Motor | ECMA-KR181BP3 | 1 |
| Oil pump | EIPC3-025RK23 | 1 |
| Pressure sensor | WIKA A-10 | 1 |

3 **Accessory Kit HESP-063-H-N-43**

| Component | Model Number | Quantity |
|---|---|---|
| ※ Braking resistor | BR1K0W025 | 1 |
| Coding device cable 5m | | 1 |
| Magnetic ring of power cable | | 1 |
| Sensor clamp | | 1 |

※ Braking resistor 1000W 25Ω Unit: min

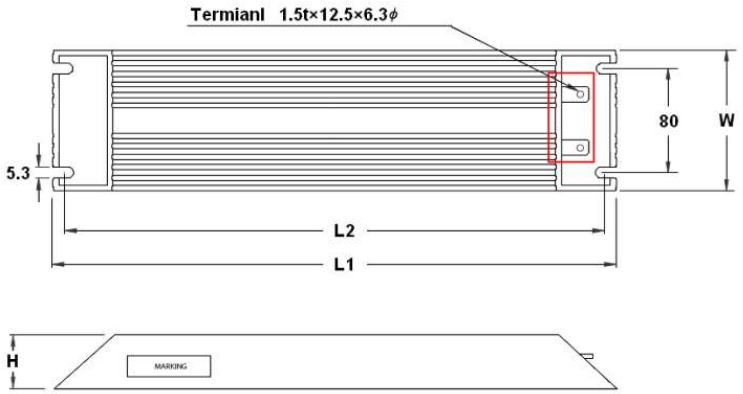


| TYPE | L1 ± 2 | L2 ± 2 | W ± 1 | H ± 1 |
|---|---|---|---|---|
| MH 1000 W | 400 | 385 | 100 | 50 |

## HES080G43A

1 Servo controller VFD150VL43B08GA, corresponding PG card EMVJ-PG02R

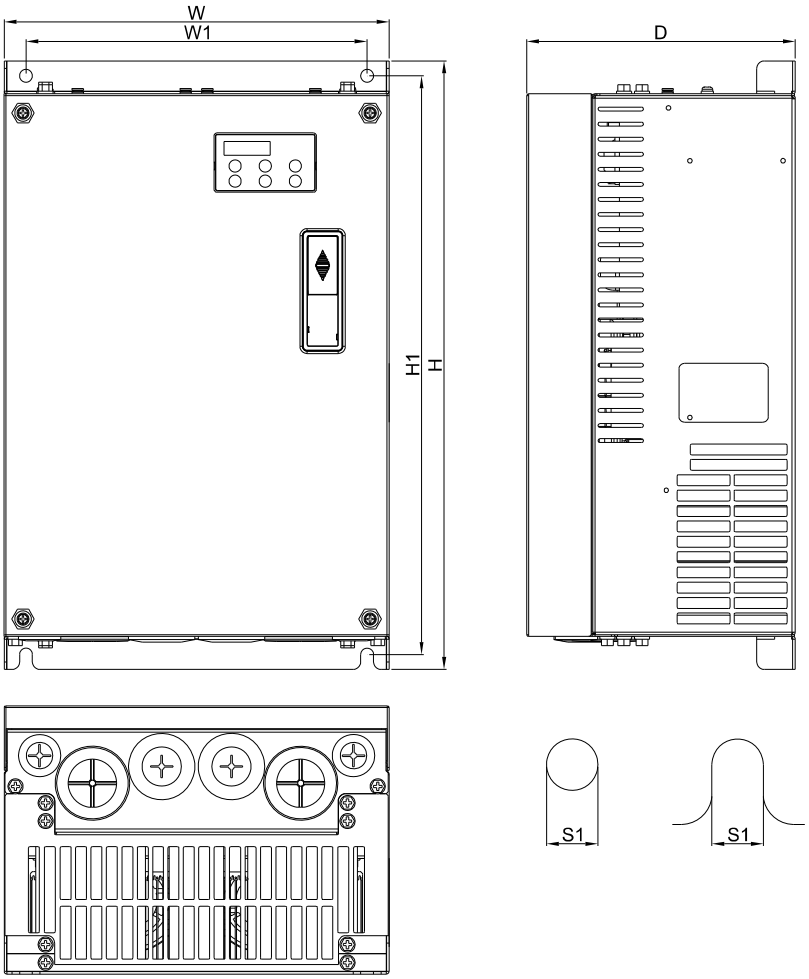


Unit: mm[inch]

| Frame | W | W1 | H | H1 | D | S1 |
|---|---|---|---|---|---|---|
| **C** | 235.0 [9.25] | 204.0 [8.03] | 350.0 [13.78] | 337.0 [13.27] | 146.0 [5.75] | 6.5 [0.26] |

2 Servo oil pump HSP-032-110-43A

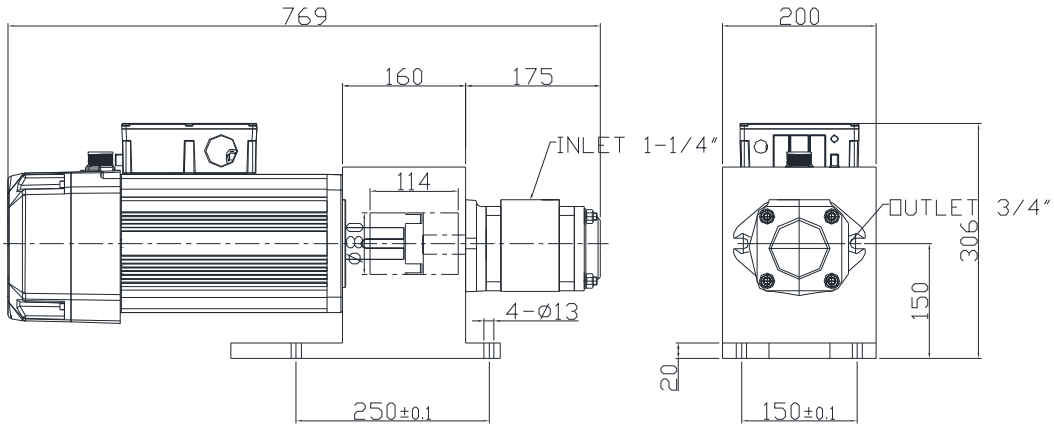


| Component | Model Number | Quantity |
|---|---|---|
| Motor | ECMA-KR181BP3 | 1 |
| Oil pump | EIPC3-032RK23 | 1 |
| Pressure sensor | WIKA A-10 | 1 |

3 **Accessory Kit HESP-080-G-N-43**

| Component | Model Number | Quantity |
|---|---|---|
| ※ Braking resistor | BR1K0W025 | 1 |
| Coding device cable 5m | | 1 |
| Magnetic ring of power cable | | 1 |
| Sensor clamp | | 1 |

※ Braking resistor 1000W 25Ω Unit: min

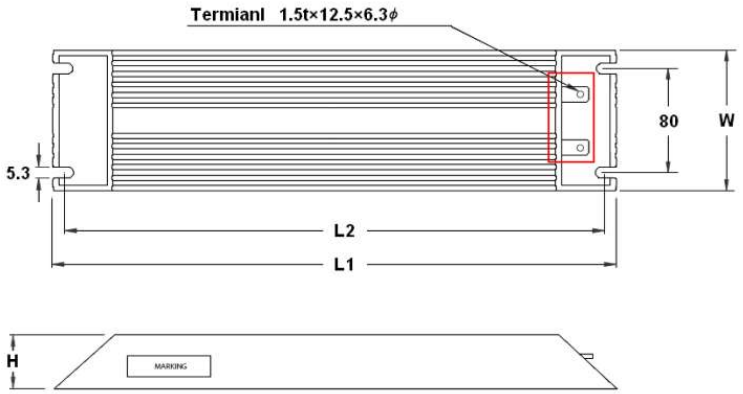


| TYPE | L1 ± 2 | L2 ± 2 | W ± 1 | H ± 1 |
|---|---|---|---|---|
| MH 1000 W | 400 | 385 | 100 | 50 |

## HES080H43A

1 Servo controller VFD185VL43B, corresponding PG card EMVJ-PG02R

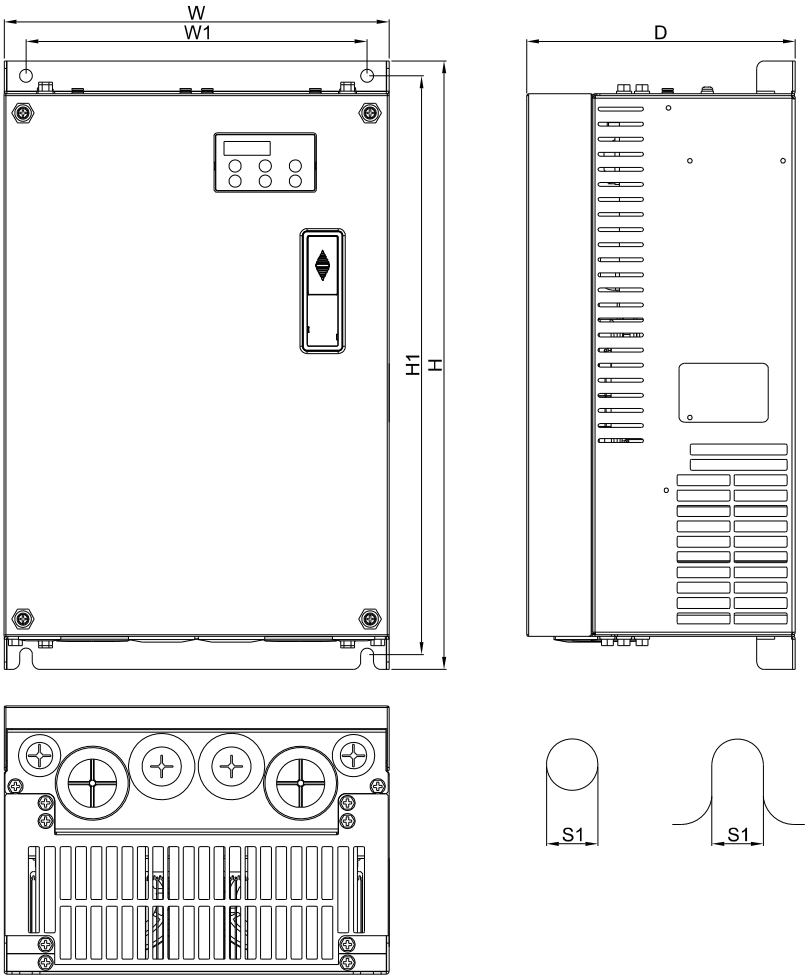


Unit: mm[inch]

| Frame | W | W1 | H | H1 | D | S1 |
|---|---|---|---|---|---|---|
| **C** | 235.0 [9.25] | 204.0 [8.03] | 350.0 [13.78] | 337.0 [13.27] | 146.0 [5.75] | 6.5 [0.26] |

2 Servo oil pump HSP-032-110-43A

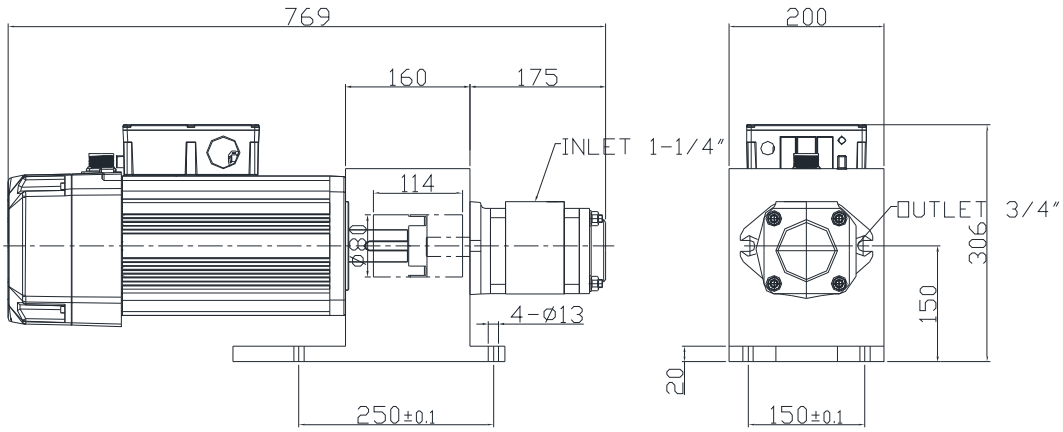


| Component | Model Number | Quantity |
|---|---|---|
| Motor | ECMA-KR181BP3 | 1 |
| Oil pump | EIPC3-032RK23 | 1 |
| Pressure sensor | WIKA A-10 | 1 |

3 **Accessory Kit HESP-080-H-N-43**

| Component | Model Number | Quantity |
|---|---|---|
| ※ Braking resistor | BR1K0W025 | 1 |
| Coding device cable 5m | | 1 |
| Magnetic ring of power cable | | 1 |
| Sensor clamp | | 1 |

※ Braking resistor 1000W 25Ω Unit: min

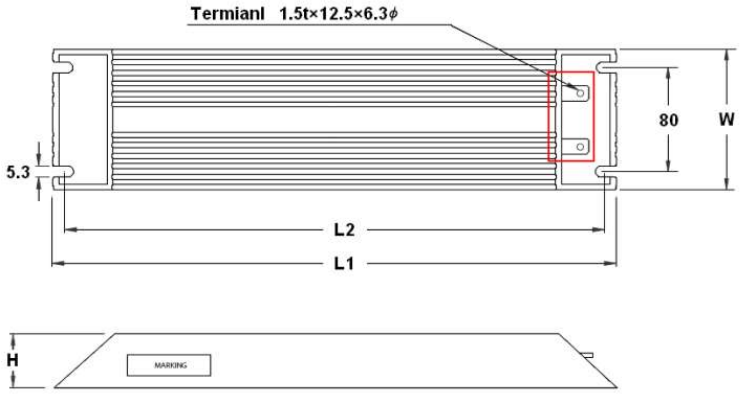


| TYPE | L1 ± 2 | L2 ± 2 | W ± 1 | H ± 1 |
|---|---|---|---|---|
| MH 1000 W | 400 | 385 | 100 | 50 |

## HES100G43A

1 Servo controller VFD185VL43B10GA, corresponding PG card EMVJ-PG02R

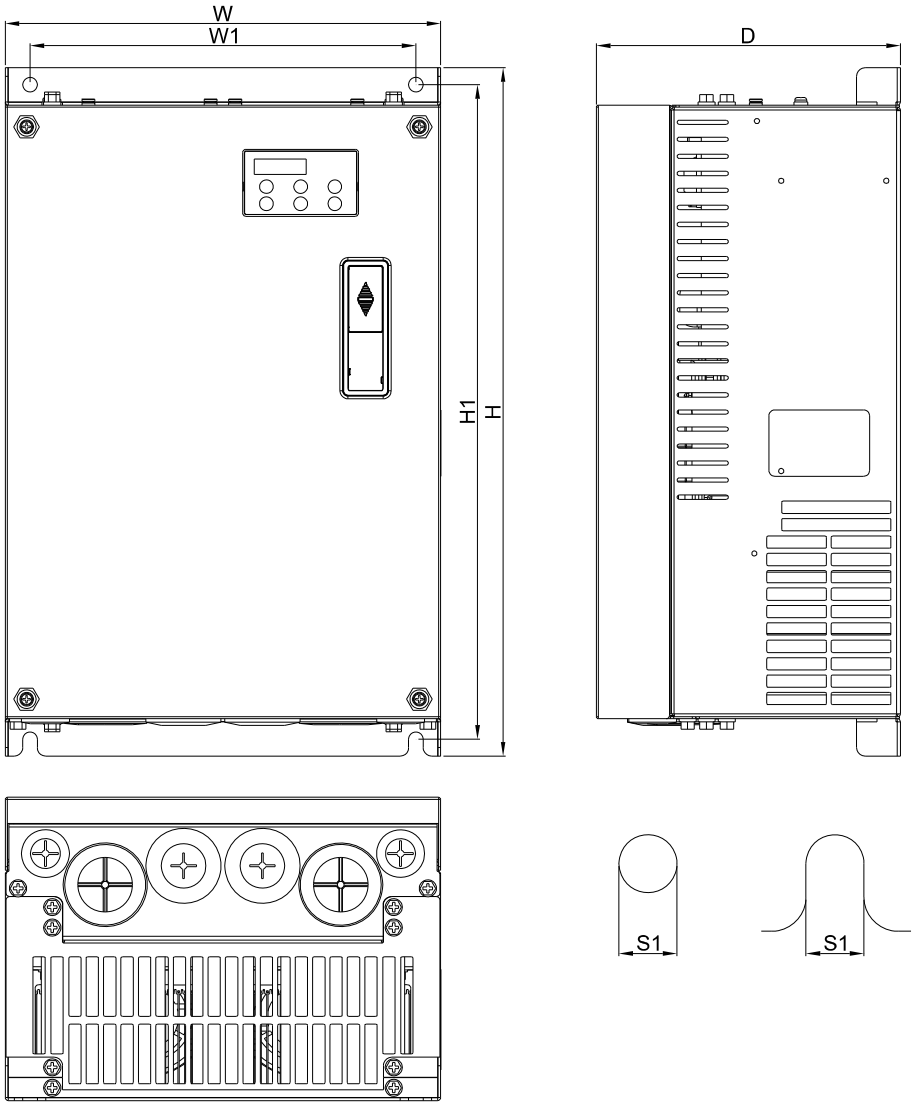


Unit: mm[inch]

| Frame | W | W1 | H | H1 | D | S1 |
|---|---|---|---|---|---|---|
| **C** | 235.0 [9.25] | 204.0 [8.03] | 350.0 [13.78] | 337.0 [13.27] | 146.0 [5.75] | 6.5 [0.26] |

2 Servo oil pump HSP-040-110-43A

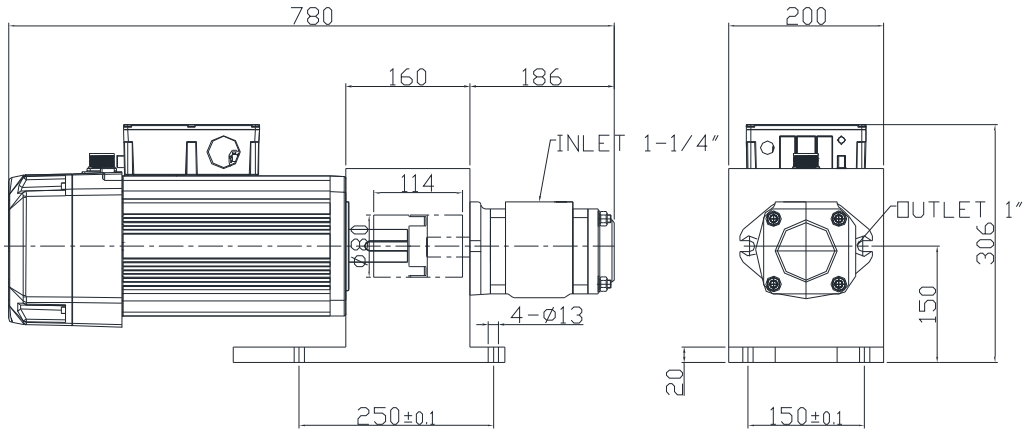


| Component | Model Number | Quantity |
|---|---|---|
| Motor | ECMA-KR181BP3 | 1 |
| Oil pump | EIPC3-040RK23 | 1 |
| Pressure sensor | WIKA A-10 | 1 |

3 **Accessory Kit HESP-100-G-N-43**

| Component | Model Number | Quantity |
|---|---|---|
| ※ Braking resistor | BR1K0W025 | 1 |
| Coding device cable 5m | | 1 |
| Magnetic ring of power cable | | 1 |
| Sensor clamp | | 1 |

※ Braking resistor 1000W 25Ω Unit: min

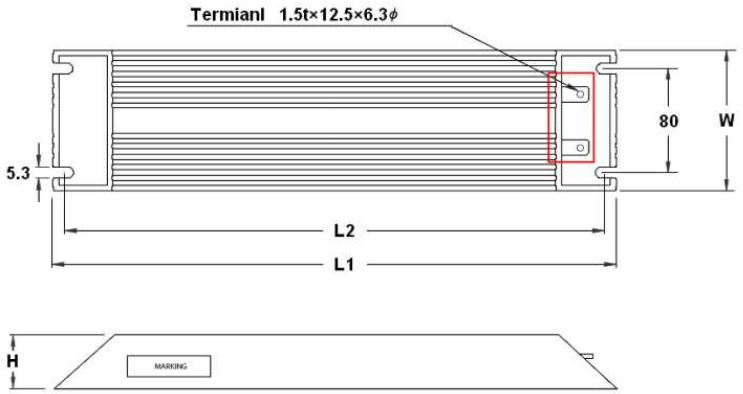


| TYPE | L1 ± 2 | L2 ± 2 | W ± 1 | H ± 1 |
|---|---|---|---|---|
| MH 1000 W | 400 | 385 | 100 | 50 |

## HES100H43A

1 Servo controller VFD220VL43A10HA, corresponding PG card EMVJ-PG02R

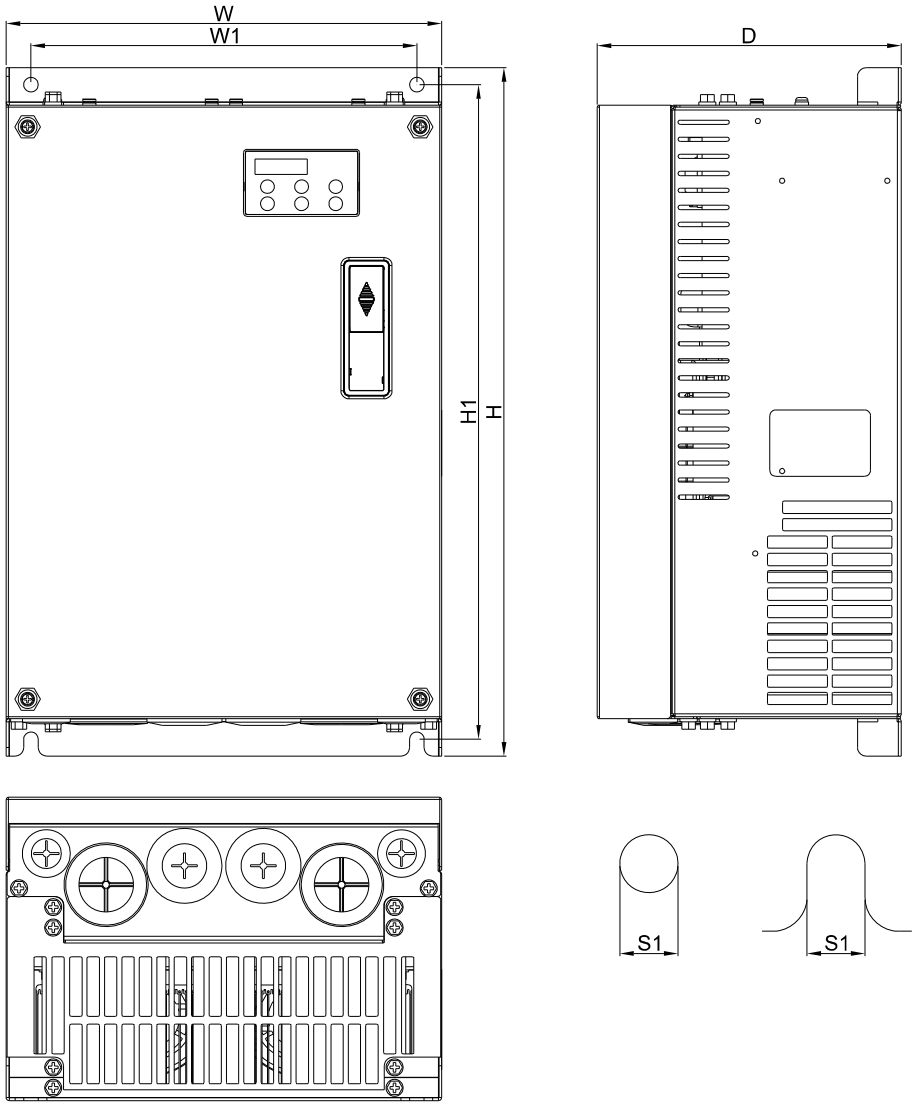


Unit: mm[inch]

| Frame | W | W1 | H | H1 | D | S1 |
|---|---|---|---|---|---|---|
| **D** | 255.0 [10.04] | 226.0 [8.90] | 403.8 [15.90] | 384.0 [15.12] | 168.0 [6.61] | 8.5 [0.33] |

2 Servo oil pump HSP-040-110-43A

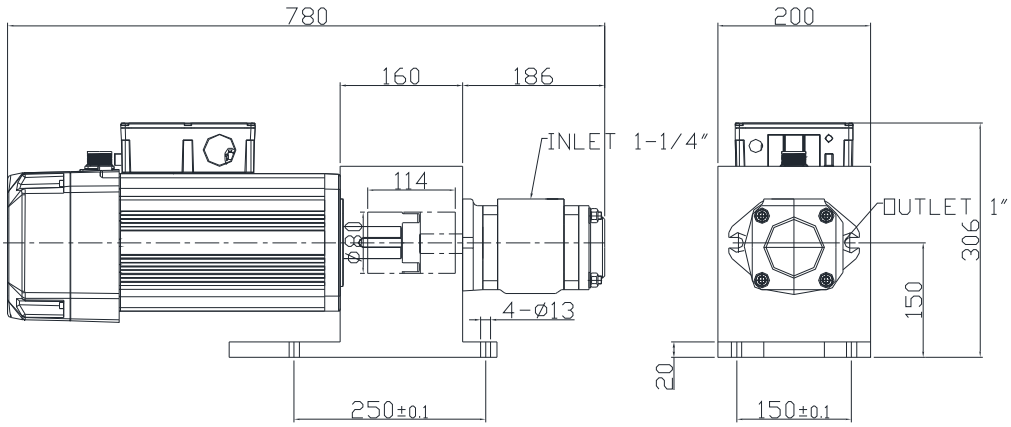


| Component | Model Number | Quantity |
|---|---|---|
| Motor | ECMA-KR181BP3 | 1 |
| Oil pump | EIPC3-040RK23 | 1 |
| Pressure sensor | WIKA A-10 | 1 |

3 **Accessory Kit HESP-100-H-N-43**

| Component | Model Number | Quantity |
|---|---|---|
| ※ Braking resistor | BR1K0W025 | 1 |
| Coding device cable 5m | | 1 |
| Magnetic ring of power cable | | 1 |
| Sensor clamp | | 1 |

※ Braking resistor 1000W 25Ω Unit: min

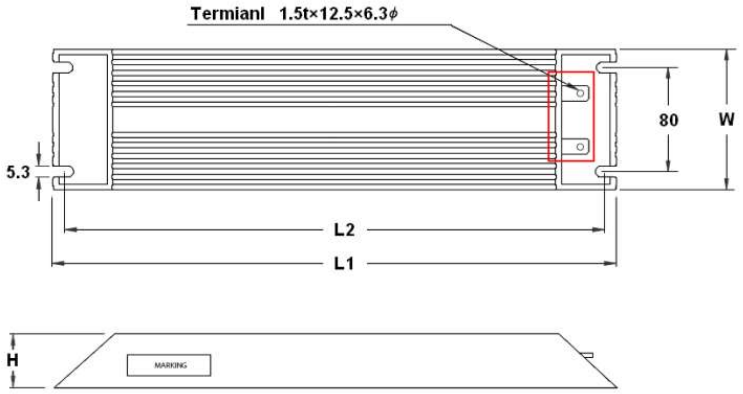


| TYPE | L1 ± 2 | L2 ± 2 | W ± 1 | H ± 1 |
|---|---|---|---|---|
| MH 1000 W | 400 | 385 | 100 | 50 |

## HES100Z43A

1 Servo controller VFD220VL43A10ZA, corresponding PG card EMVJ-PG02R

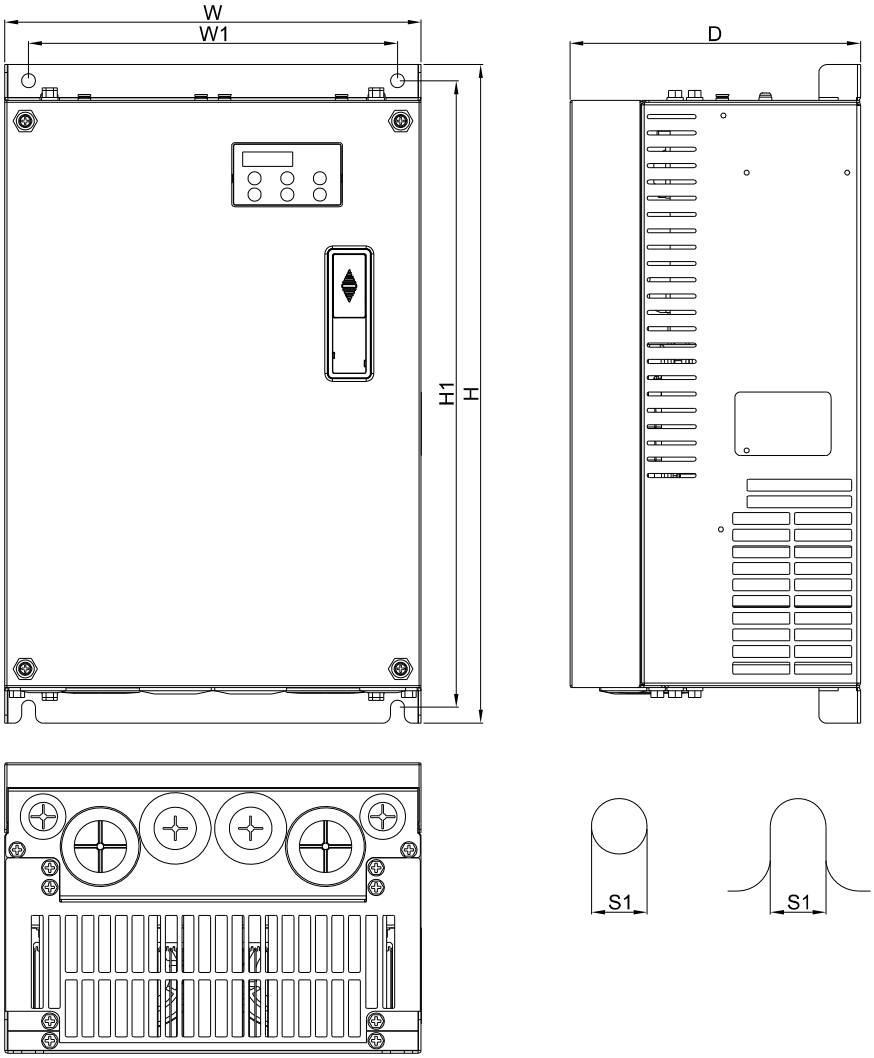


Unit: mm[inch]

| Frame | W | W1 | H | H1 | D | S1 |
|---|---|---|---|---|---|---|
| **D** | 255.0 [10.04] | 226.0 [8.90] | 403.8 [15.90] | 384.0 [15.12] | 168.0 [6.61] | 8.5 [0.33] |

2 Servo oil pump HSP-040-150-43A

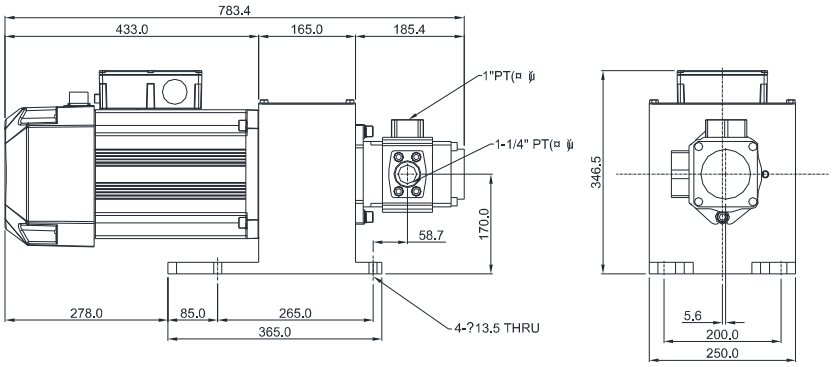


| Component | Model Number | Quantity |
|---|---|---|
| Motor | ECMA-KR221BP3 | 1 |
| Oil pump | EIPC3-040RK23 | 1 |
| Pressure sensor | WIKA A-10 | 1 |

3 **Accessory Kit HESP-100-Z-N-43**

| Component | Model Number | Quantity |
|---|---|---|
| ※ Braking resistor | BR1K0W025 | 1 |
| Coding device cable 5m | | 1 |
| Magnetic ring of power cable | | 1 |
| Sensor clamp | | 1 |

※ Braking resistor 1000W 25Ω Unit: min

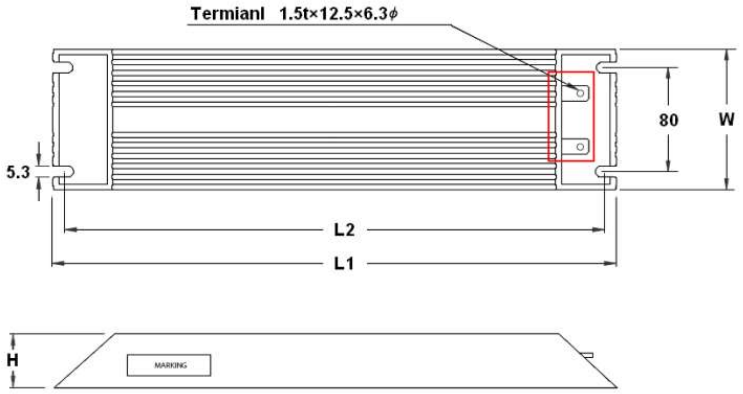


| TYPE | L1 ± 2 | L2 ± 2 | W ± 1 | H ± 1 |
|---|---|---|---|---|
| MH 1000 W | 400 | 385 | 100 | 50 |

## HES125G43A

1 Servo controller VFD220VL43A12GA, corresponding PG card EMVJ-PG02R

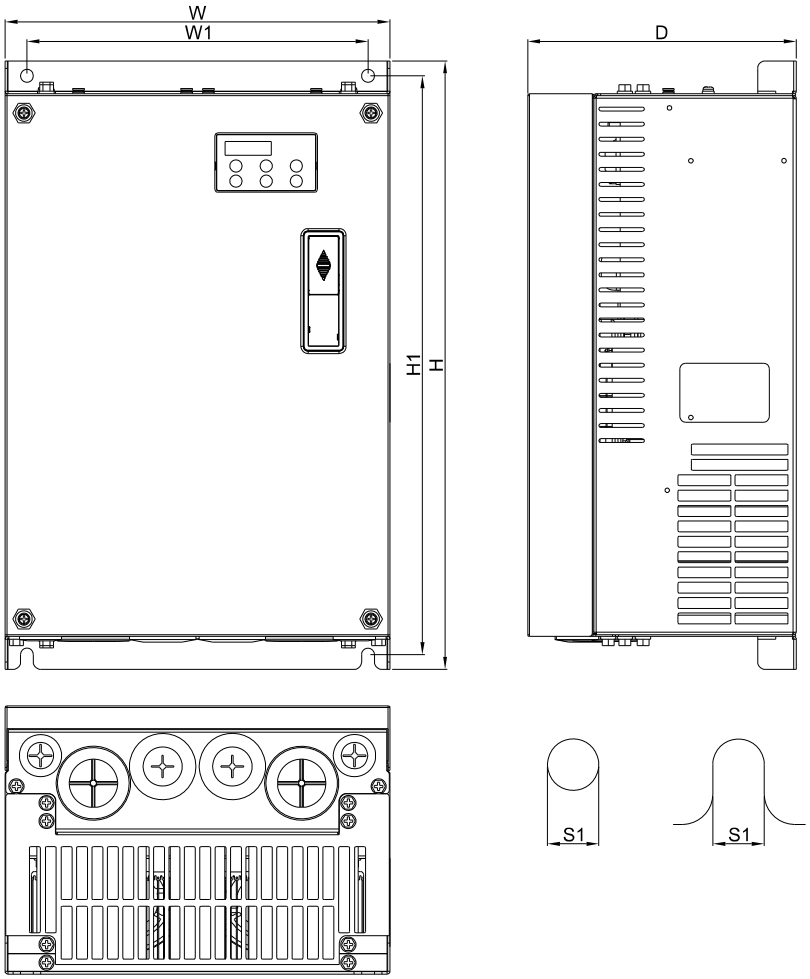


Unit: mm[inch]

| Frame | W | W1 | H | H1 | D | S1 |
|---|---|---|---|---|---|---|
| **D** | 255.0 [10.04] | 226.0 [8.90] | 403.8 [15.90] | 384.0 [15.12] | 168.0 [6.61] | 8.5 [0.33] |

2 Servo oil pump HSP-050-150-43A

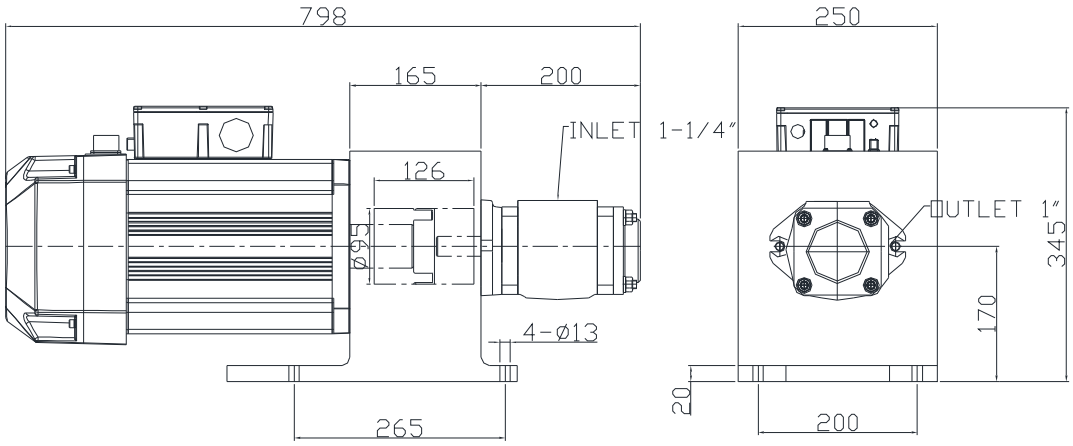


| Component | Model Number | Quantity |
|---|---|---|
| Motor | ECMA-KR221FPS | 1 |
| Oil pump | EIPC3-050RK23 | 1 |
| Pressure sensor | WIKA A-10 | 1 |

3 **Accessory Kit HESP-125-G-N-43**

| Component | Model Number | Quantity |
|---|---|---|
| ※ Braking resistor | BR1K0W020 | 1 |
| Coding device cable 5m | | 1 |
| Magnetic ring of power cable | | 1 |
| Sensor clamp | | 1 |

※ Braking resistor10000W 20Ω Unit: min

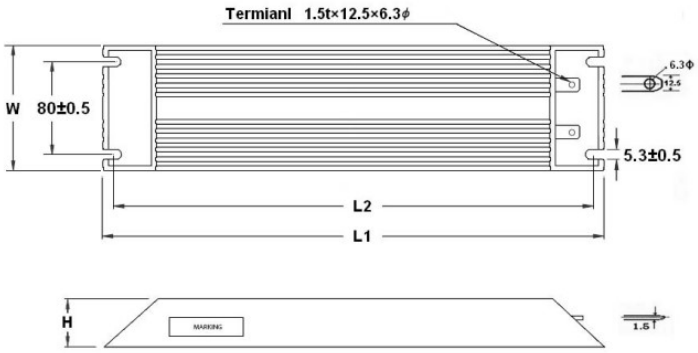


| TYPE | L1 ± 2 | L2 ± 2 | W ± 0.5 | H ± 0.5 |
|---|---|---|---|---|
| MH 1000 W | 400 | 385 | 100 | 50 |

## HES125H43A

1 Servo controller VFD300VL43B12HA, corresponding PG card EMVJ-PG02R

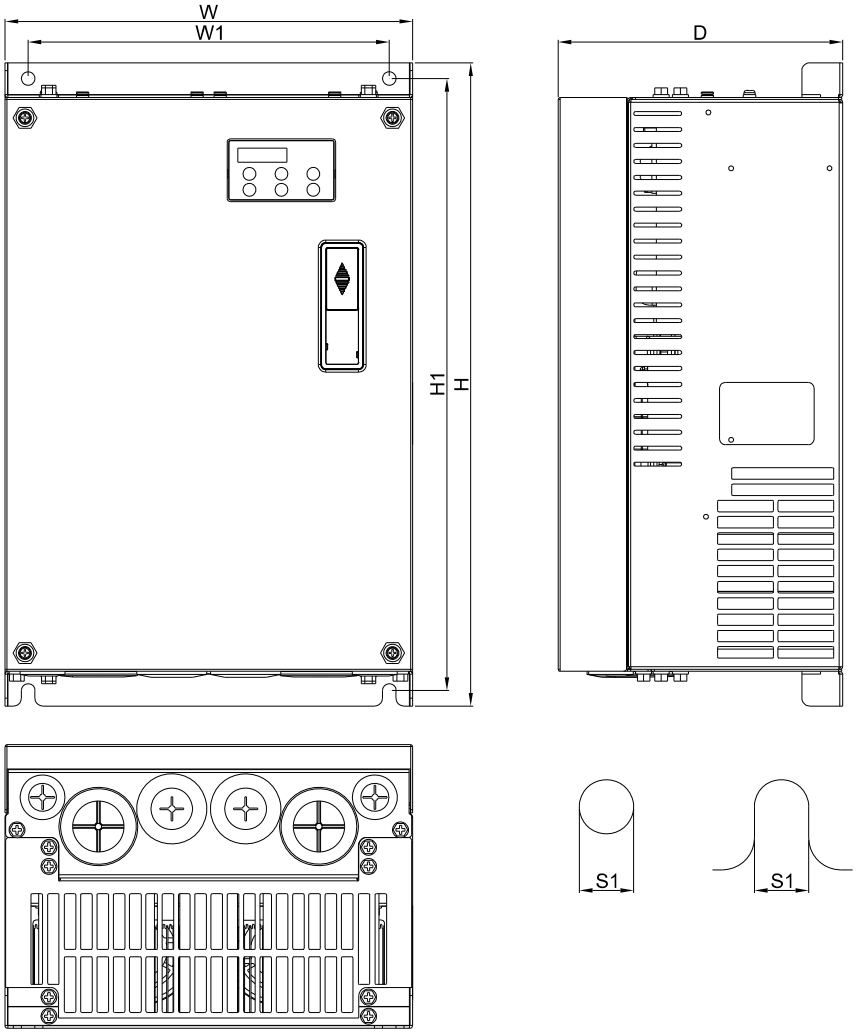


Unit: mm[inch]

| Frame | W | W1 | H | H1 | D | S1 |
|---|---|---|---|---|---|---|
| **D** | 255.0 [10.04] | 226.0 [8.90] | 403.8 [15.90] | 384.0 [15.12] | 168.0 [6.61] | 8.5 [0.33] |

2 Servo oil pump HSP-050-150-43B

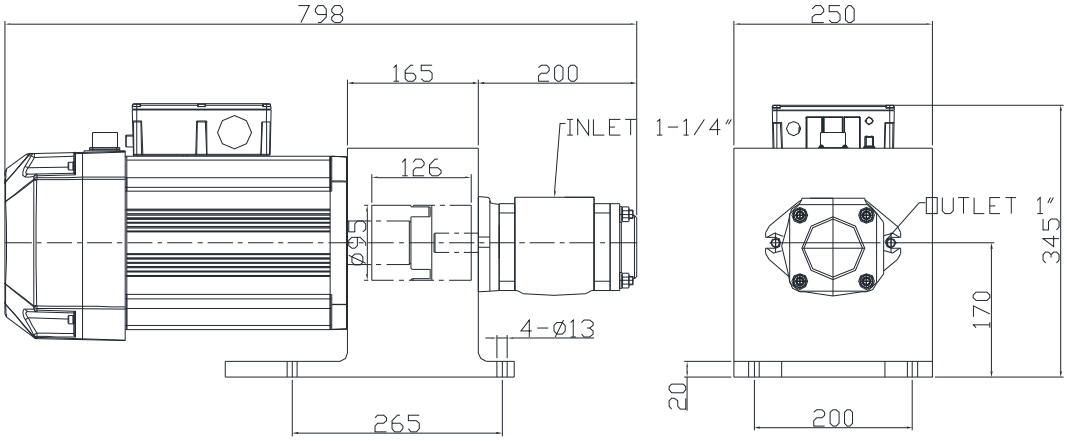


| Component | Model Number | Quantity |
|---|---|---|
| Motor | ECMA-KR221FPS | 1 |
| Oil pump | EIPC3-050RK23 | 1 |
| Pressure sensor | WIKA A-10 | 1 |

3 **Accessory Kit HESP-125-H-N-43**

| Component | Model Number | Quantity |
|---|---|---|
| ※ Braking resistor | MHR1K0W014 | 1 |

| Coding device cable 5m*1 | Magnetic ring of power cable*3 | Sensor clamp*1 |
|---|---|---|
| | | |

※ Braking resistor 1000W 14Ω Unit: min

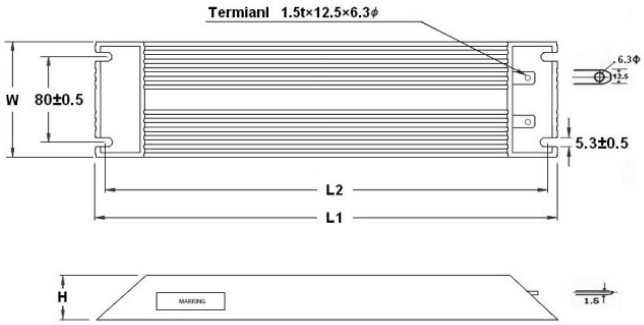


| TYPE | L1 ± 2 | L2 ± 2 | W ± 0.5 | H ± 0.5 |
|---|---|---|---|---|
| MH 1000 W | 400 | 385 | 100 | 50 |

## HES160G43A

1 Servo controller VFD300VL43B16GA, corresponding PG card EMVJ-PG02R

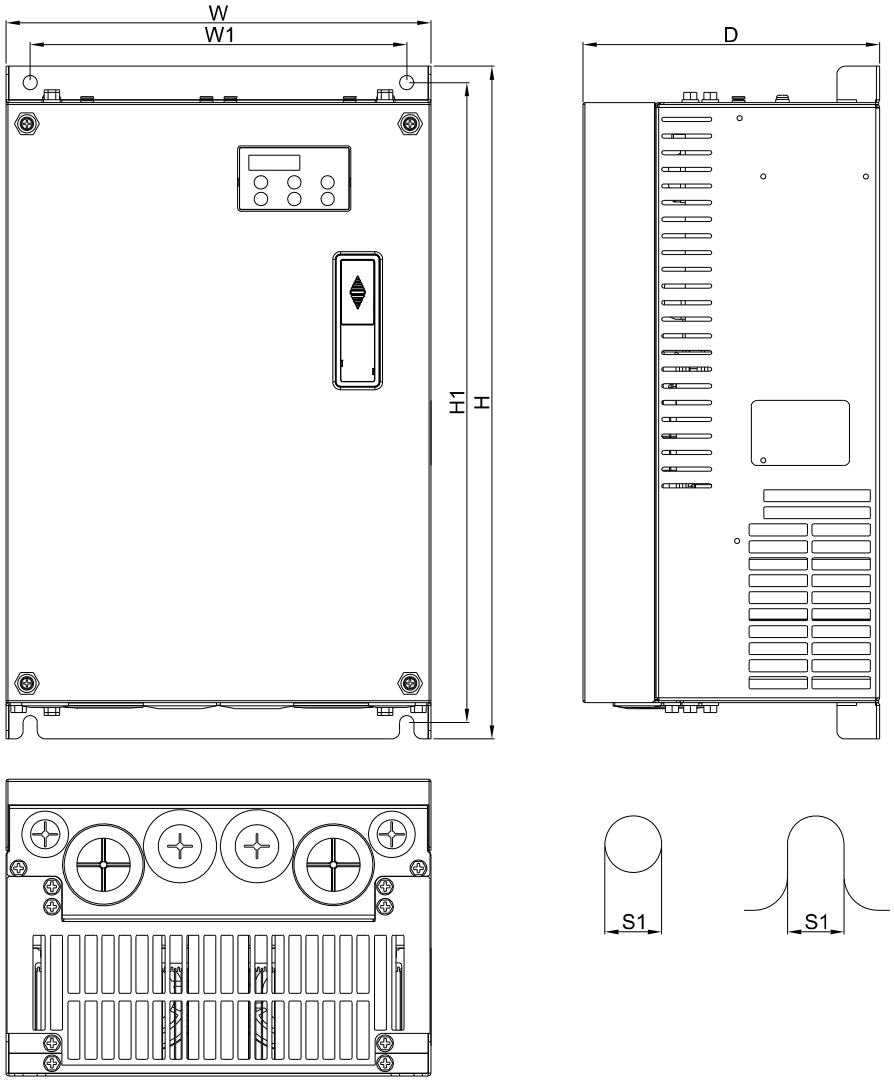


Unit: mm[inch]

| Frame | W | W1 | H | H1 | D | S1 |
|---|---|---|---|---|---|---|
| **D** | 255.0 [10.04] | 226.0 [8.90] | 403.8 [15.90] | 384.0 [15.12] | 168.0 [6.61] | 8.5 [0.33] |

2 Servo oil pump HSP-064-150-43A

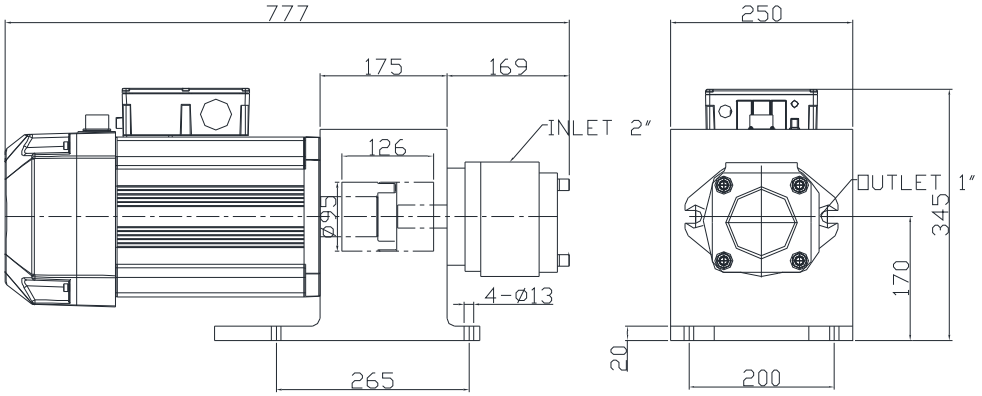


| Component | Model Number | Quantity |
|---|---|---|
| Motor | ECMA-KR221FPS | 1 |
| Oil pump | EIPC5-064RA23 | 1 |
| Pressure sensor | WIKA A-10 | 1 |

3 **Accessory Kit HESP-160-G-N-43**

| Component | Model Number | Quantity |
|---|---|---|
| ※Braking resistor | MHR1K0W014 | 1 |

| Coding device cable 5m*1 | Magnetic ring of power cable*3 | Sensor clamp*1 |
|---|---|---|
| | | |

※Braking resistor1000W 14Ω Unit: min

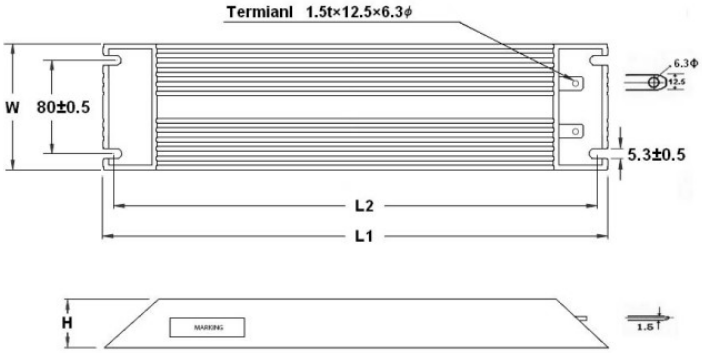


| TYPE | L1 ± 2 | L2 ± 2 | W ± 0.5 | H ± 0.5 |
|---|---|---|---|---|
| MH 1000 W | 400 | 385 | 100 | 50 |

## HES160H43A

1 Servo controller VFD370VL43B16HA, , corresponding PG card EMVJ-PG02R

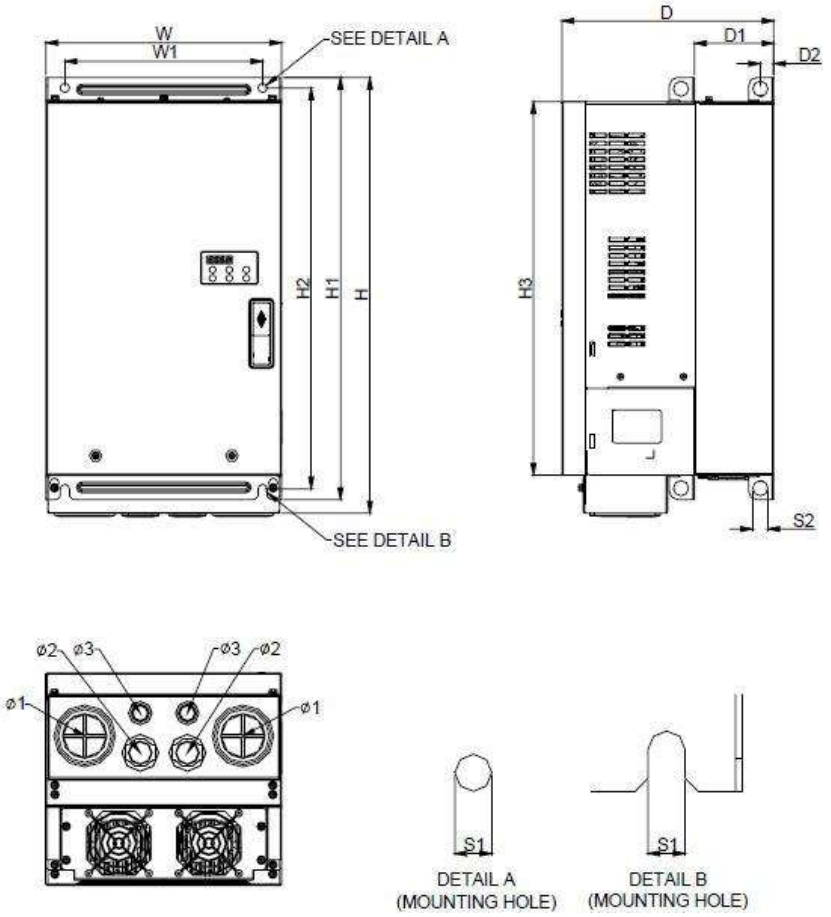


Unit: mm[inch]

| Frame | W | W1 | H | H1 | H2 | H3 | D | D1 | D2 | S1 | S2 | Ø1 | Ø2 | Ø3 |
|---|---|---|---|---|---|---|---|---|---|---|---|---|---|---|
| E0 | 280.0<br>[11.02] | 235.0<br>[9.25] | 516.0<br>[20.31] | 500.0<br>[19.69] | 475.0<br>[18.70] | 442.0<br>[17.40] | 251.7<br>[9.91] | 94.2<br>[3.71] | 16.0<br>[0.63] | 11.0<br>[0.43] | 18.0<br>[0.71] | 62.7<br>[2.47] | 34.0<br>[1.34] | 22.0<br>[0.87] |

2 Servo oil pump HSP-064-200-43A

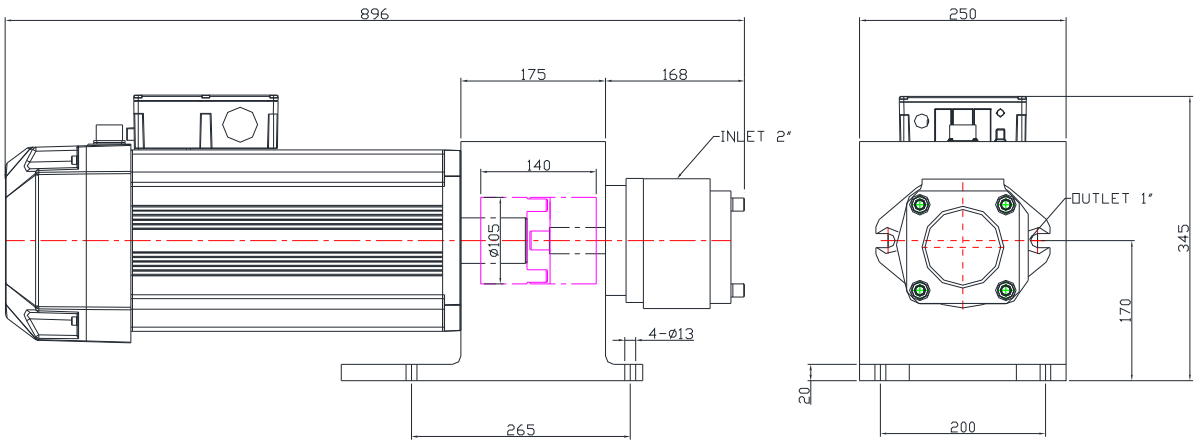


| Component | Model Number | Quantity |
|---|---|---|
| Motor | ECMA-KR222APS | 1 |
| Oil pump | EIPC5-064RA23 | 1 |
| Pressure sensor | WIKA A-10 | 1 |

3 **Accessory Kit HESP-160-H-B-43**

| Component | Model Number | Quantity |
|---|---|---|
| ※1 Braking unit | VFDB-4045 | 1 |
| ※2 Braking resistor | MHR1K5W013 | 1 |

| Coding device cable 5m*1 | Magnetic ring of power cable*3 | Sensor clamp*1 |
|---|---|---|
| | | |

※1 Braking unit VFDB-4045

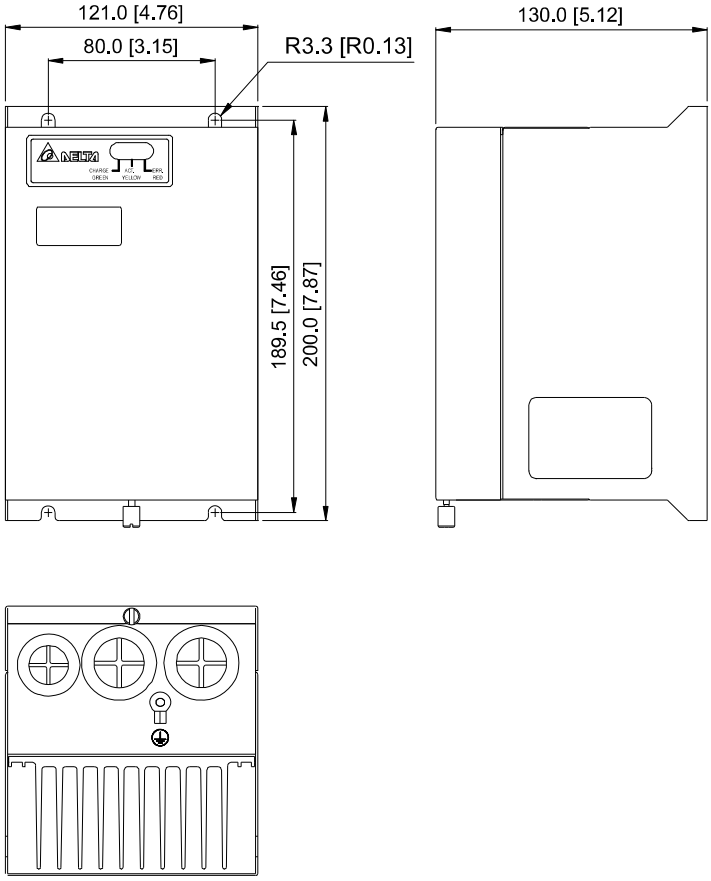


※2 Braking resistor 1500W 13Ω Unit: min

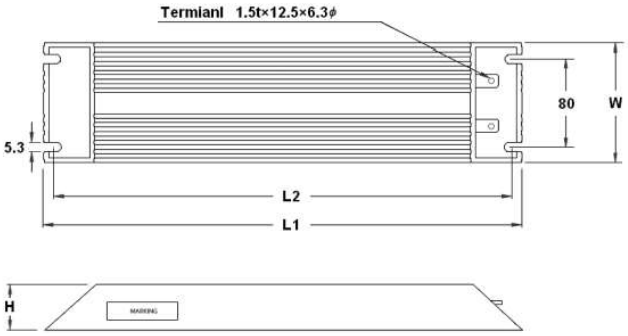


| TYPE | L1 ± 2 | L2 ± 2 | H ± 1 | W ± 1 |
|---|---|---|---|---|
| MH 1500 W | 550 | 535 | 50 | 100 |

## HES200G43A

1 Servo controller VFD370VL43B20GA, corresponding PG card EMVJ-PG02R

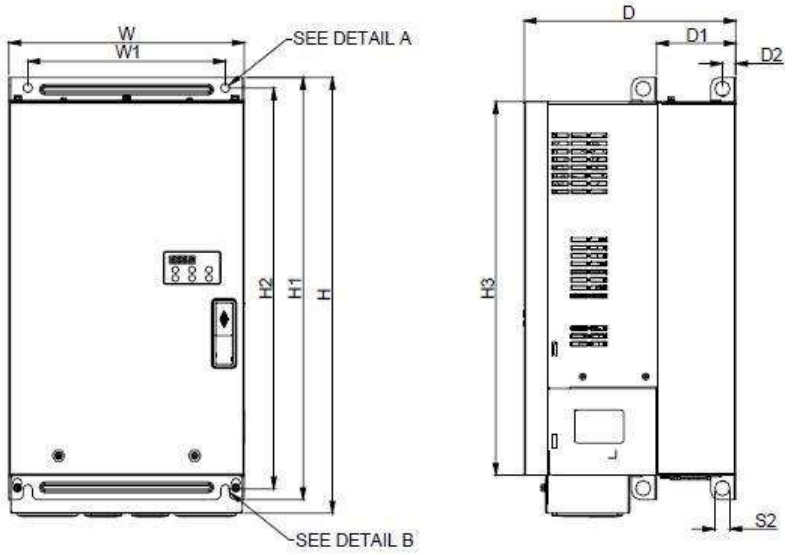


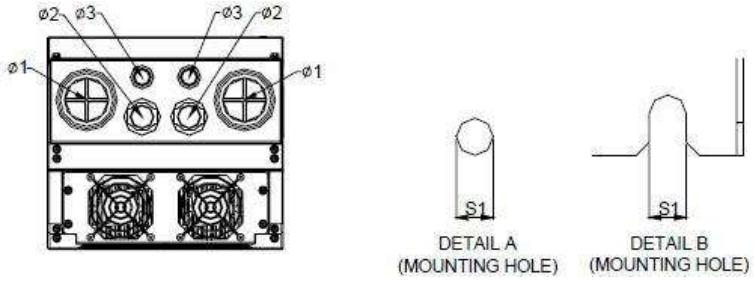


Unit: mm[inch]

| Frame | W | W1 | H | H1 | H2 | H3 | D | D1 | D2 | S1 | S2 | Ø1 | Ø2 | Ø3 |
|---|---|---|---|---|---|---|---|---|---|---|---|---|---|---|
| E0 | 280.0 | 235.0 | 516.0 | 500.0 | 475.0 | 442.0 | 251.7 | 94.2 | 16.0 | 11.0 | 18.0 | 62.7 | 34.0 | 22.0 |
| | [11.02] | [9.25] | [20.31] | [19.69] | [18.70] | [17.40] | [9.91] | [3.71] | [0.63] | [0.43] | [0.71] | [2.47] | [1.34] | [0.87] |

2 Servo oil pump HSP-080-200-43A

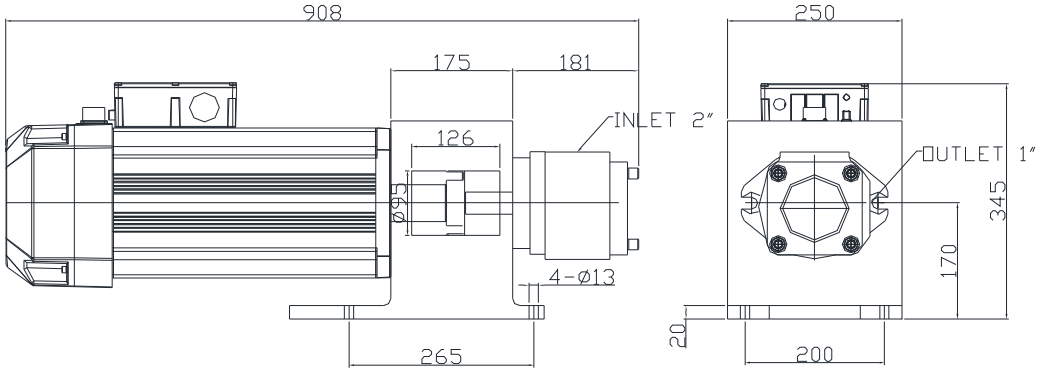


| Component | Model Number | Quantity |
|---|---|---|
| Motor | ECMA-KR222APS | 1 |
| Oil pump | EIPC5-080-RA23-10 | 1 |
| Pressure sensor | WIKA A-10 | 1 |

3 **Accessory Kit HESP-200-G-B-43**

| Component | Model Number | Quantity |
|---|---|---|
| ※1 Braking unit | VFDB-4045 | 1 |
| ※2 Braking resistor | MHR1K5W013 | 1 |

| Coding device cable 5m*1 | Magnetic ring of power cable*3 | Sensor clamp*1 |
|---|---|---|
| | | |

※1 Braking unit VFDB-4045

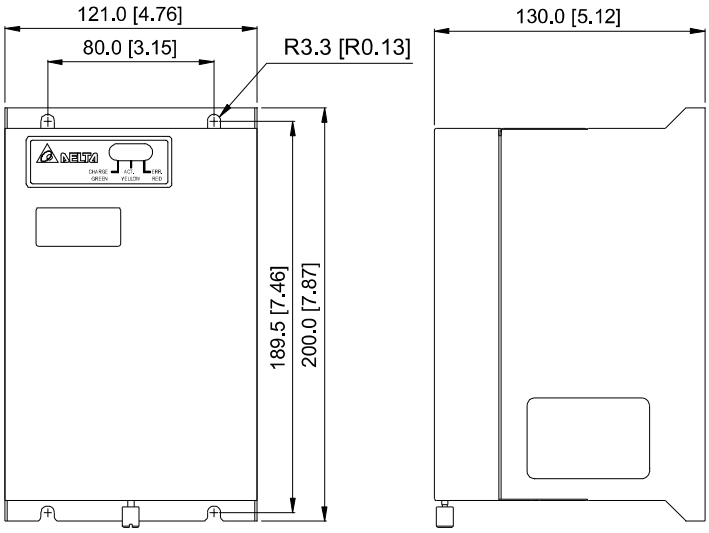


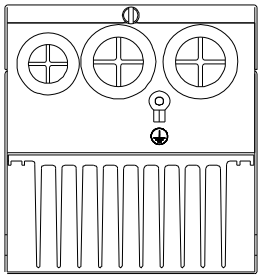

※2 Braking resistor 1500W 13Ω Unit: min

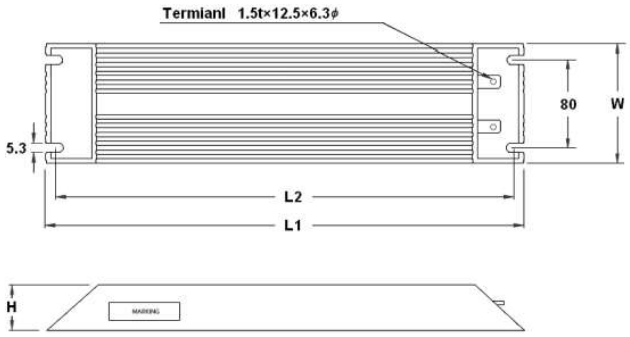


| TYPE | L1 ± 2 | L2 ± 2 | H ± 1 | W ± 1 |
|---|---|---|---|---|
| MH 1500 W | 550 | 535 | 50 | 100 |

# A-4 Detailed List of Product Packaging: v.C

**Corresponding Models:**

| |
|---|
| HES063H23C |
| HES063H43C |
| HES063M43C |
| |
| HES080H23C |
| HES080H43C |
| HES080M43C |
| |
| HES100H23C |
| HES100H43C |
| HES100M43C |
| |
| HES125H23C |
| HES125H43C |
| HES125M43C |
| |
| HES160H23C |
| HES160H43C |
| HES160M43C |
| |
| HES200H23C |
| HES200H43C |
| HES200M43C |
| |
| HES250G23C |
| HES250M43C |
| |
| HES320M43C |

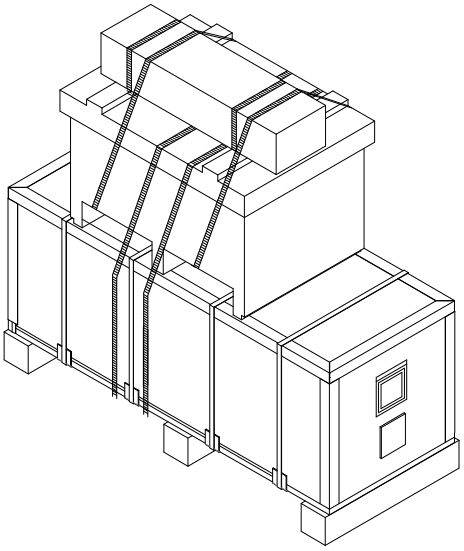

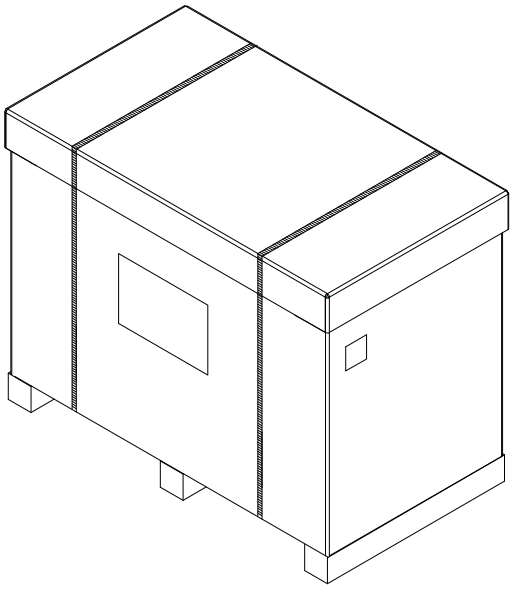

## 01. HES063H23C

1 Servo controller: VFD110VL23A06HC

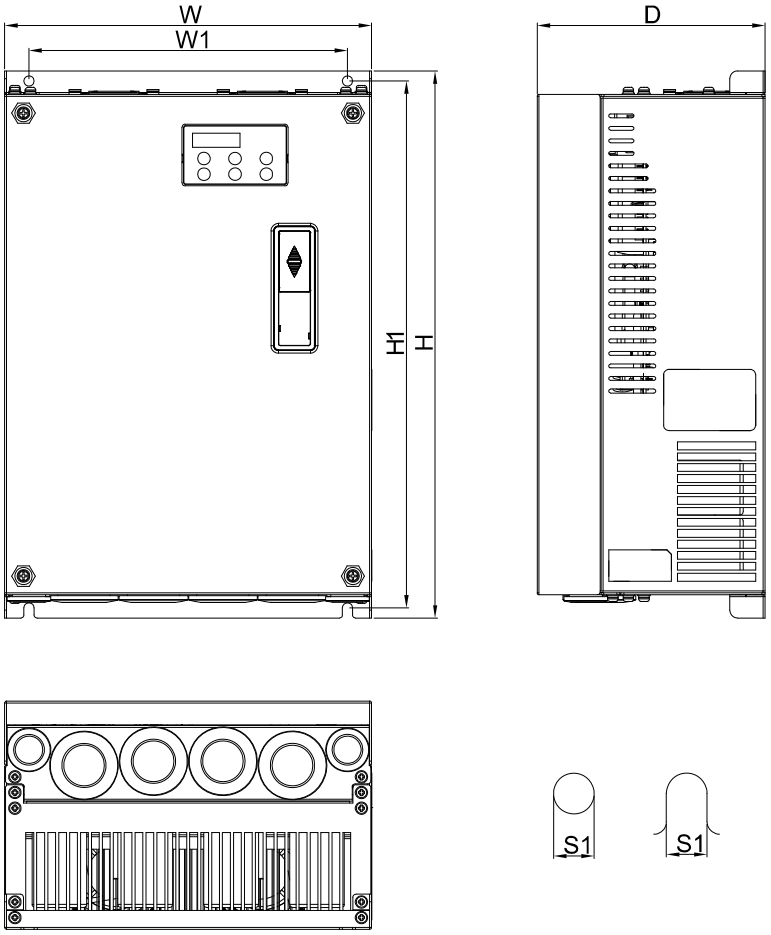


Unit：mm[inch]

| Frame | | W | H | D | W1 | H1 | S1 |
|---|---|---|---|---|---|---|---|
| C | mm | 235 | 350 | 146 | 204 | 337 | 6.5 |
| | inch | 9.25 | 13.78 | 5.75 | 8.03 | 13.27 | 0.26 |

2 Servo oil pump: HSP-025-100-23C

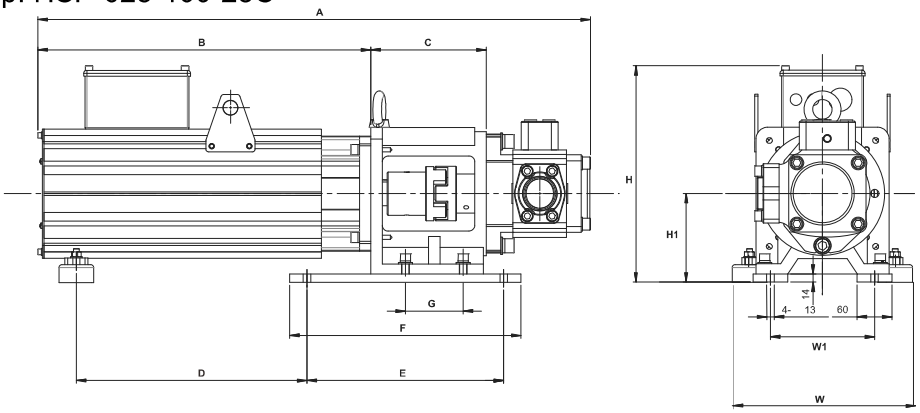


| component | model number | Quantity |
|---|---|---|
| Motor | MSJ-DR201AE42C | 1 |
| Oil pump | HSP-025-100-23C | 1 |

3 Accessory Kit: HESP-063-H-NC23

| component | model number | Quantity |
|---|---|---|
| Braking resistor | BR300W8P3 (MH300W) | 1 |
| Pressure sensor; WIKA A-10 | | 1 |
| Magnetic ring of power cable | | 3 |
| Sensor clamp | | 1 |

Note: An encoder cable (model number: CBHE-E5M) is in the HSP Servo oil pump packaging

4: Braking resistor: BR300W8P3 (MH300W)

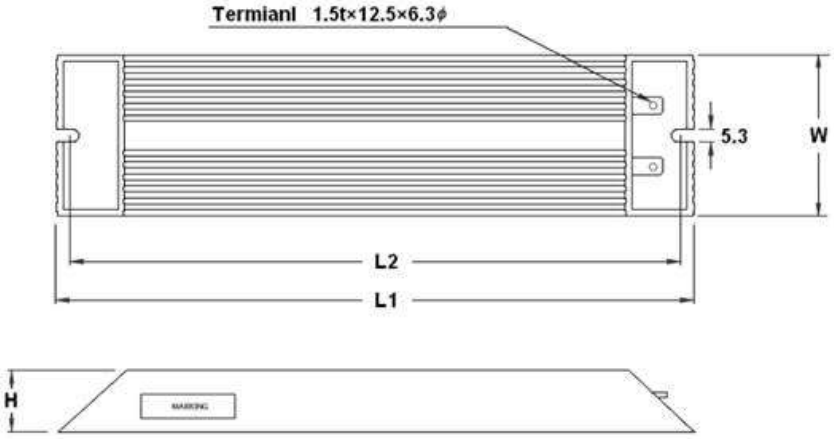


| TYPE | L1 ± 2 | L2 ± 2 | W ± 0.5 | H ± 0.5 |
|---|---|---|---|---|
| MH 300 W | 215 | 200 | 60 | 30 |

## 02. HES080H23C

1 Servo controller: VFD150VL23A08HC:

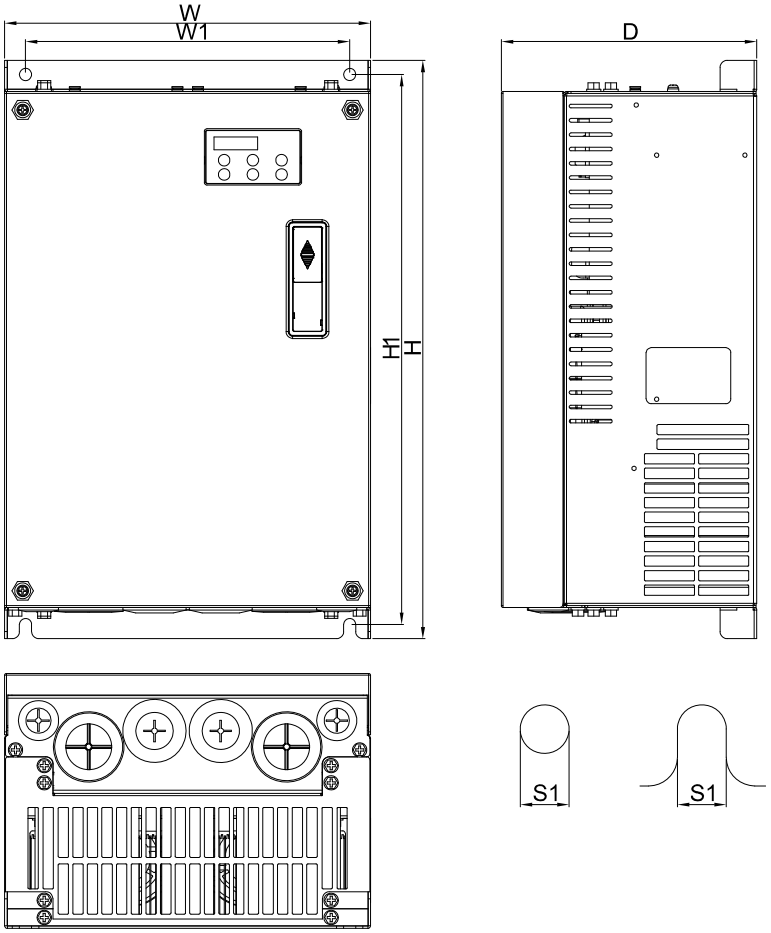


Unit：mm[inch]

| Frame | | W | H | D | W1 | H1 | S1 |
|---|---|---|---|---|---|---|---|
| D | mm | 255 | 403.8 | 168.0 | 226.0 | 384 | 8.5 |
| | inch | 10.04 | 15.90 | 6.61 | 8.90 | 15.12 | 0.33 |

2 Servo oil pump: HSP-032-140-43C

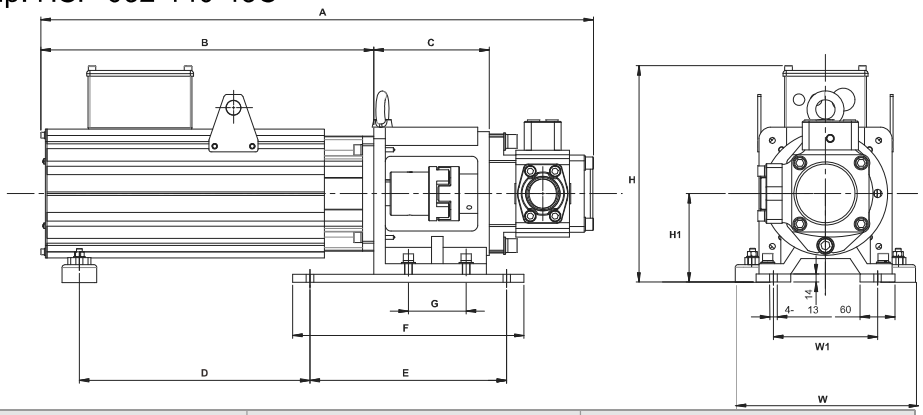


| component | model number | Quantity |
|---|---|---|
| Motor | MSJ-DR201EE42C | 1 |
| Oil pump | HSP-032-140-43C | 1 |

3 Accessory Kit: HESP-080-H-NC23

| component | model number | Quantity |
|---|---|---|
| Braking resistor | BR1K0W5P8 (MH1000W) | 1 |
| Pressure sensor: WIKA A-10 | | 1 |
| Magnetic ring of power cable | | 3 |
| Sensor clamp | | 1 |

Note: An encoder cable (model number: CBHE-E5M) is in the HSP Servo oil pump packaging

4 Braking resistor: BR1K0W5P8 (MH1000W)

**Shape & Dimension：**
**(Unit：min)**

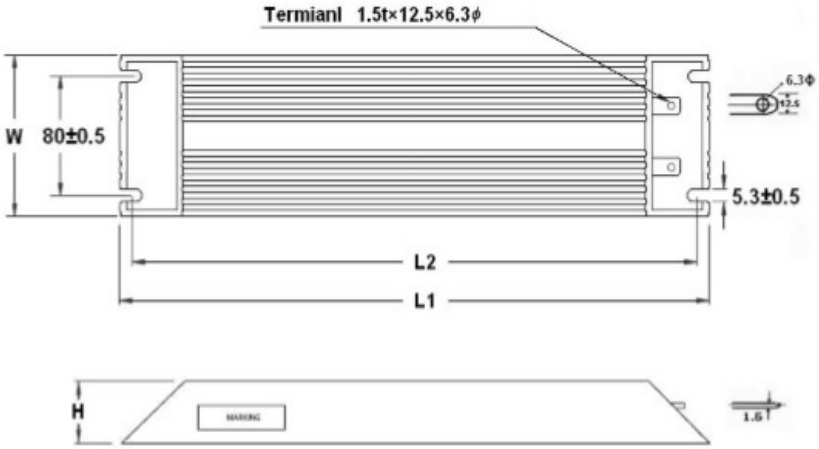


| TYPE | L1 ± 2 | L2 ± 2 | W ± 0.5 | H ± 0.5 |
|---|---|---|---|---|
| MH 1000 W | 400 | 385 | 100 | 50 |

## 03. HES100H23C

1 Servo controller: VFD150VL23A10HC

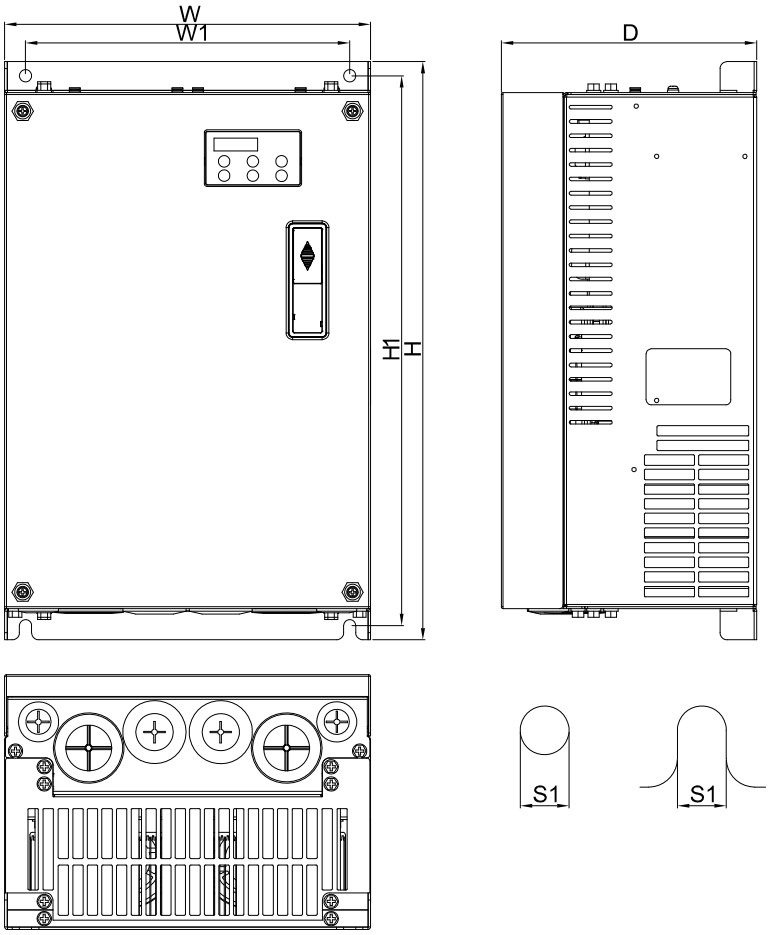


Unit：mm[inch]

| Frame | | W | H | D | W1 | H1 | S1 |
|---|---|---|---|---|---|---|---|
| D | mm | 255 | 403.8 | 168.0 | 226.0 | 384 | 8.5 |
| | inch | 10.04 | 15.90 | 6.61 | 8.90 | 15.12 | 0.33 |

2 Servo oil pump: HSP-040-140-23C

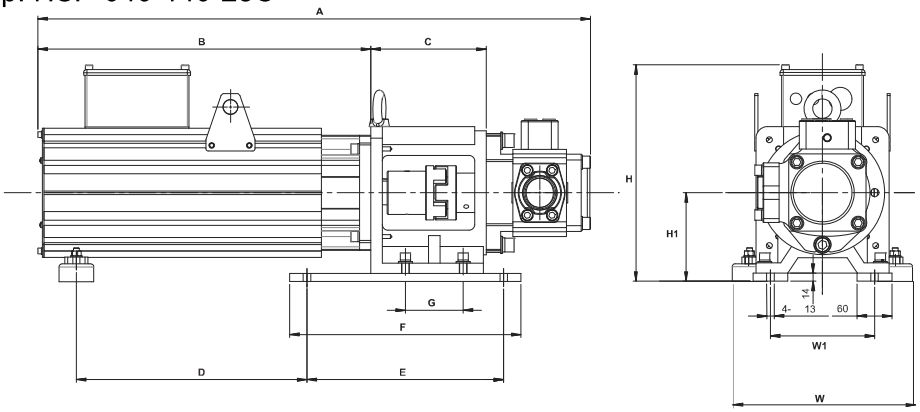


| component | model number | Quantity |
|---|---|---|
| Motor | MSJ-DR201EE42C | 1 |
| Oil pump | HSP-040-140-23C, | 1 |

3 Accessory Kit: HESP-100-H-NC23:

| component | model number | Quantity |
|---|---|---|
| ※ Braking resistor | BR1K0W5P8 (MH1000W) | 1 |
| Pressure sensor: WIKA A-10 | | 1 |
| Magnetic ring of power cable | | 3 |
| Sensor clamp | | 1 |

Note: An encoder cable (model number: CBHE-E5M) is in the HSP Servo oil pump packaging

4 Braking resistor: : BR1K0W5P8 (MH1000W)

**Shape & Dimension：**
**(Unit：min)**

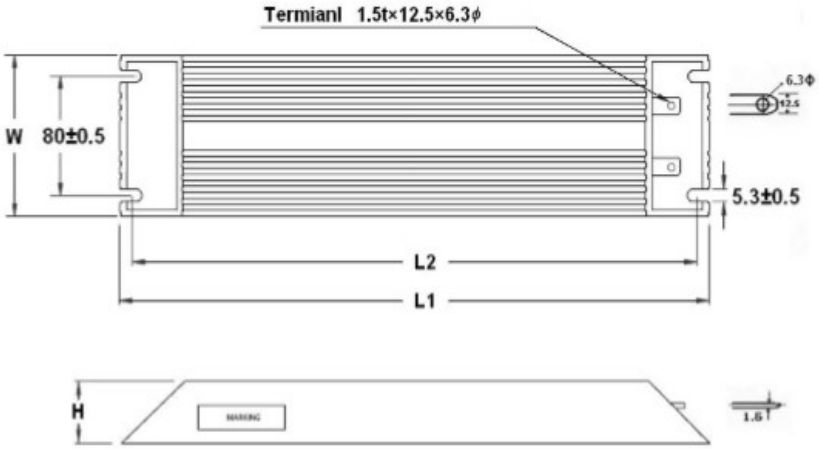


| TYPE | L1 ± 2 | L2 ± 2 | W ± 0.5 | H ± 0.5 |
|---|---|---|---|---|
| MH 1000 W | 400 | 385 | 100 | 50 |

## 04. HES125H23C

1 Servo controller: VFD220VL23A12HC

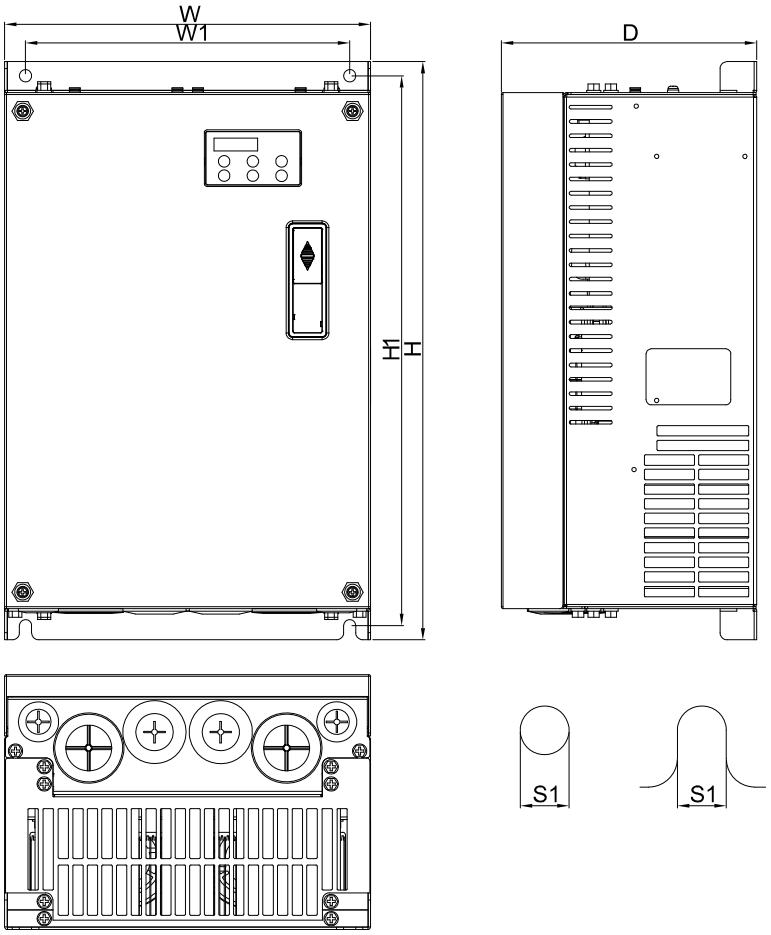


Unit：mm[inch]

| Frame | | W | H | D | W1 | H1 | S1 |
|---|---|---|---|---|---|---|---|
| D | mm | 255 | 403.8 | 168.0 | 226.0 | 384 | 8.5 |
| | inch | 10.04 | 15.90 | 6.61 | 8.90 | 15.12 | 0.33 |

2 Servo oil pump: HSP-050-180-23C

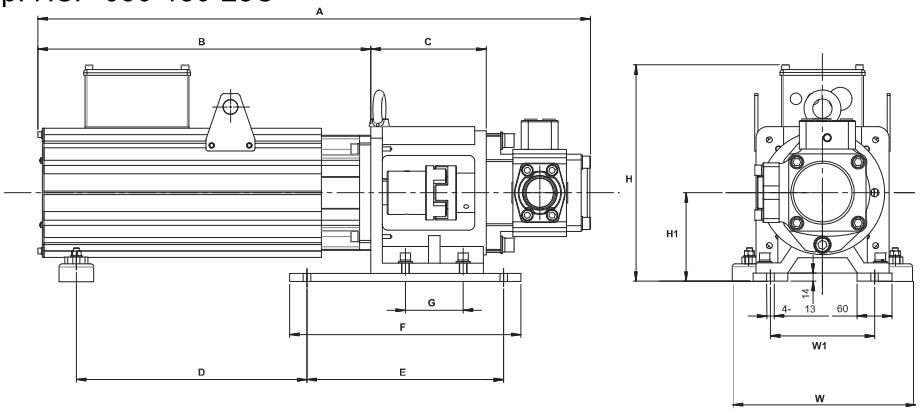


| component | model number | Quantity |
|---|---|---|
| Motor | MSJ-DR201IE42C | 1 |
| Oil pump | HSP-050-180-23C | 1 |

3 Accessory Kit: HESP-125-H-NC23

| component | model number | Quantity |
|---|---|---|
| Braking resistor | BR1K0W5P8 (MH1000W) | 1 |
| Pressure sensor: WIKA A-10 | | 1 |
| Magnetic ring of power cable | | 3 |
| Sensor clamp | | 1 |

Note: An encoder cable (model number: CBHE-E5M) is in the HSP Servo oil pump packaging

4 Braking resistor: BR1K0W5P8 (MH1000W)

**Shape & Dimension：**
**(Unit：min)**

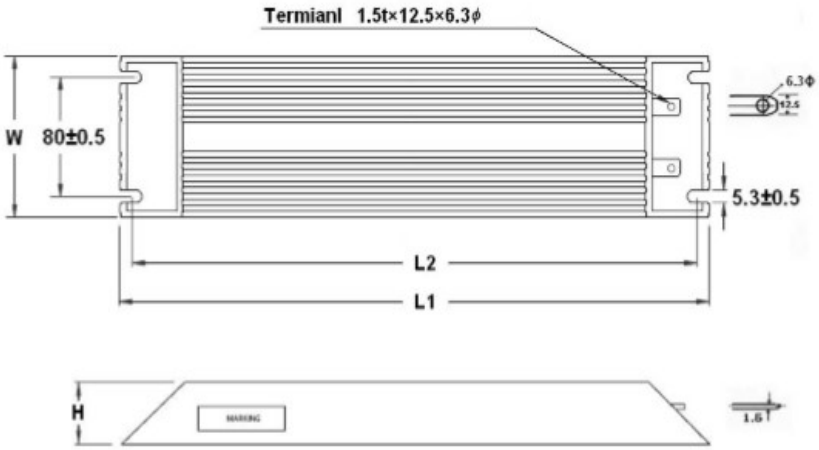


| TYPE | L1 ± 2 | L2 ± 2 | W ± 0.5 | H ± 0.5 |
|---|---|---|---|---|
| MH 1000 W | 400 | 385 | 100 | 50 |

## 05. HES160H23C

1 Servo controller: VFD300VL23A16HC

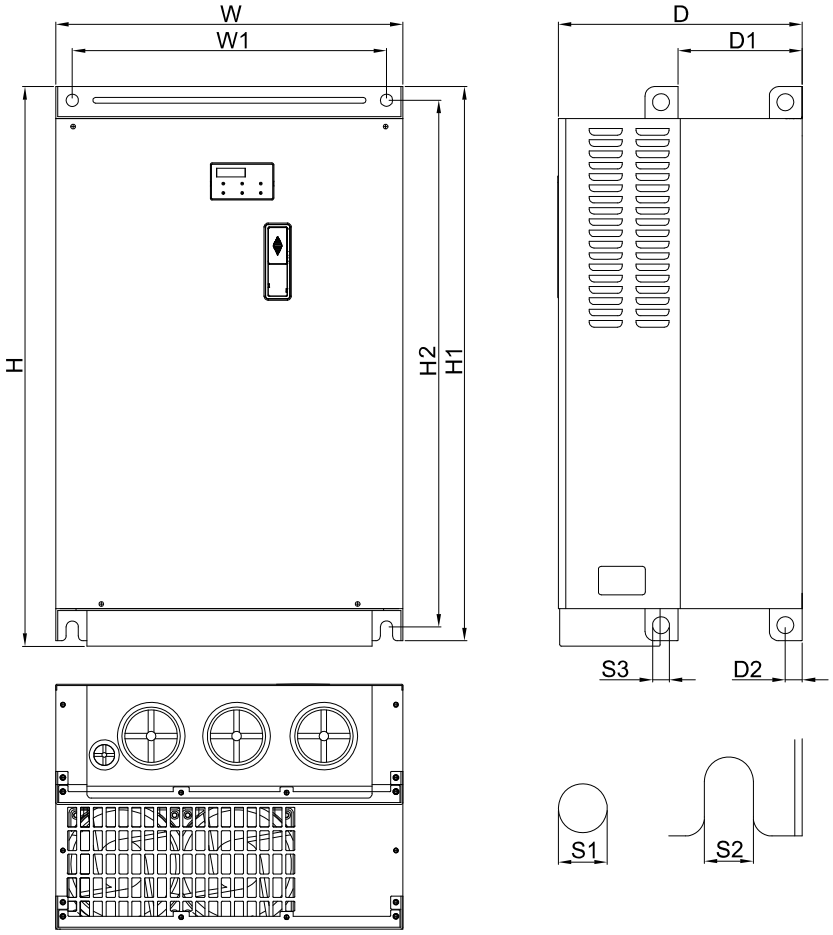


Unit：mm[inch]

| Frame | | W | H | D | W1 | H1 | H2 | D1 | D2 | S1 | S2 | S3 |
|---|---|---|---|---|---|---|---|---|---|---|---|---|
| E2 | mm | 370.0 | 595.0 | 260.0 | 335.0 | 589.0 | 560.0 | 132.5 | 18.0 | 13.0 | 13.0 | 18.0 |
| | inch | 14.57 | 23.43 | 10.24 | 13.19 | 23.1 | 22.05 | 5.22 | 0.71 | 0.51 | 0.51 | 0.71 |

2 Servo oil pump: HSP-064-230-23C

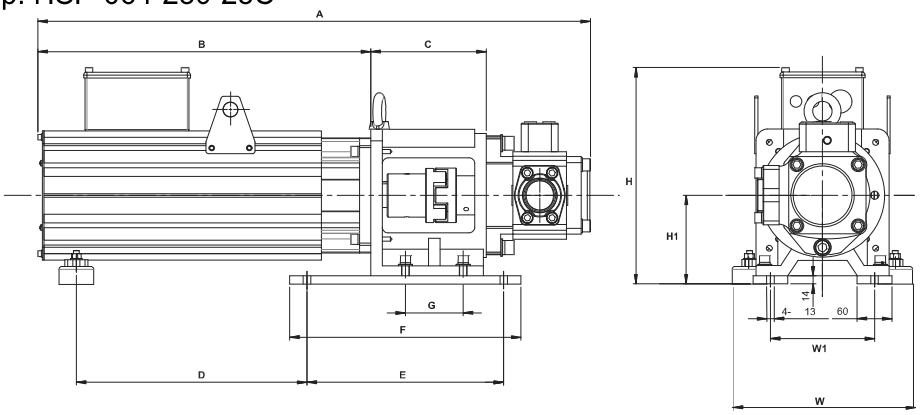


| component | model number | Quantity |
|---|---|---|
| Motor | MSJ-GR202DE42C | 1 |
| Oil pump | HSP-064-230-23C | 1 |

3 Accessory Kit: HESP-160-H-BC23

| component | model number | Quantity |
|---|---|---|
| Braking resistor | BR1K0W5P8 (MH1000W) | 1 |
| Pressure sensor: WIKA A-10 | | 1 |
| Magnetic ring of power cable | | 3 |
| Sensor clamp | | 1 |

Note: An encoder cable (model number: CBHE-E5M) is in the HSP Servo oil pump packaging

4 Braking resistor: BR1K0W5P8 (MH1000W)

**Shape & Dimension：**
**(Unit：min)**

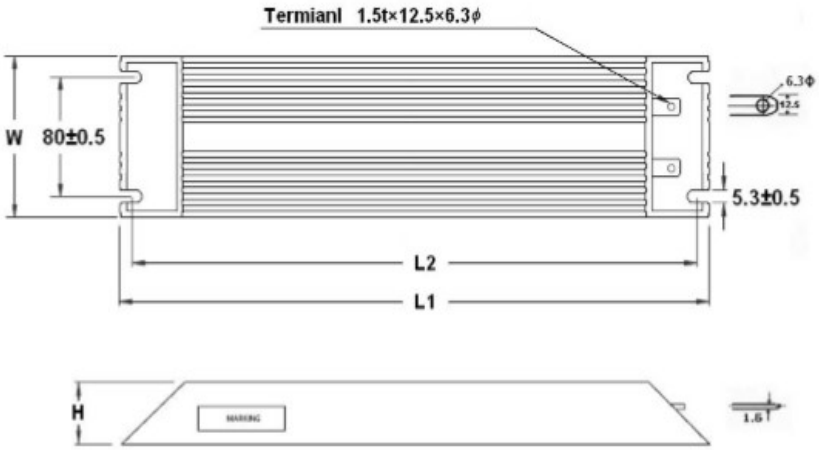


| TYPE | L1 ± 2 | L2 ± 2 | W ± 0.5 | H ± 0.5 |
|---|---|---|---|---|
| MH 1000 W | 400 | 385 | 100 | 50 |

## 06. HES200H23C

1 Servo controller: VFD300VL23A20HC

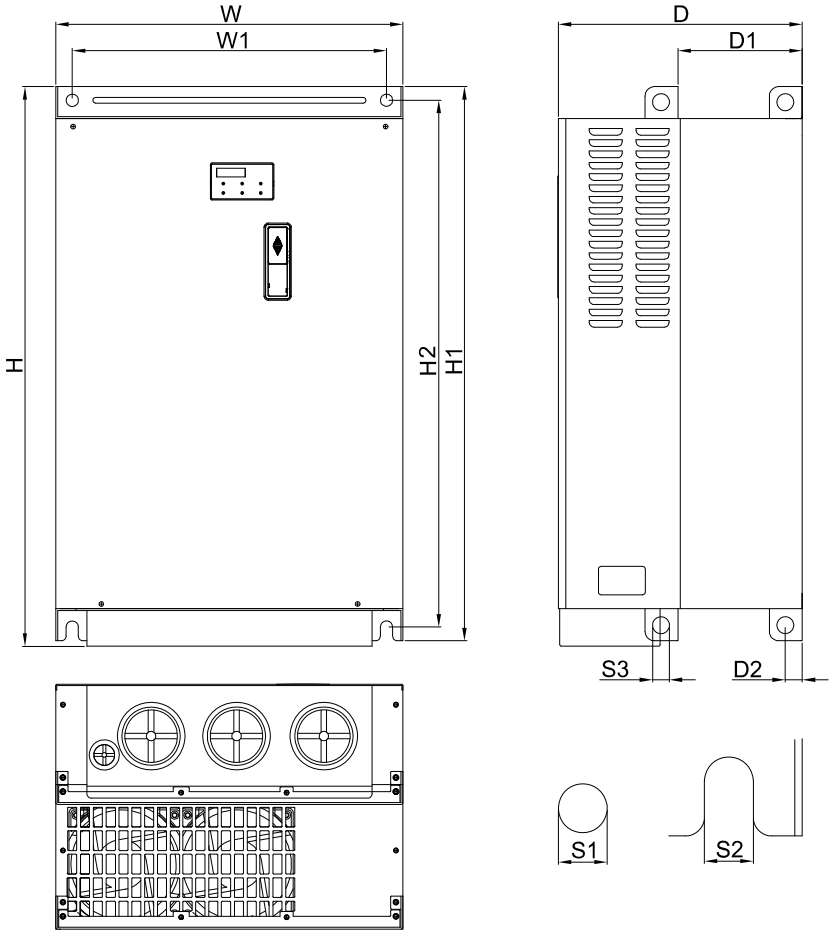


Unit：mm[inch]

| Frame | | W | H | D | W1 | H1 | H2 | D1 | D2 | S1 | S2 | S3 |
|---|---|---|---|---|---|---|---|---|---|---|---|---|
| E2 | mm | 370.0 | 595.0 | 260.0 | 335.0 | 589.0 | 560.0 | 132.5 | 18.0 | 13.0 | 13.0 | 18.0 |
| | inch | 14.57 | 23.43 | 10.24 | 13.19 | 23.1 | 22.05 | 5.22 | 0.71 | 0.51 | 0.51 | 0.71 |

2 Servo oil pump: HSP-080-270-23C

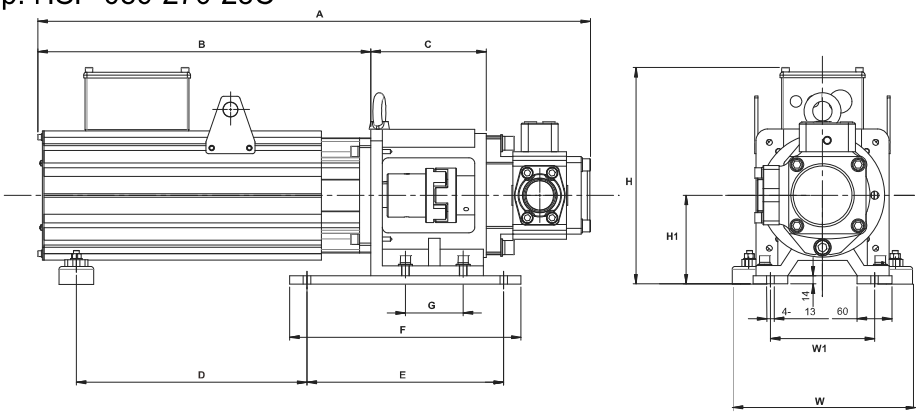


| component | model number | Quantity |
|---|---|---|
| Motor | MSJ-DR202HE42C | 1 |
| Oil pump | HSP-080-270-23C | 1 |

3 Accessory Kit: HESP-200-H-BC23

| component | model number | Quantity |
|---|---|---|
| Braking resistor | BR1K0W5P8 (MH1000W) | 1 |
| Pressure sensor: WIKA A-10 | | 1 |
| Magnetic ring of power cable | | 3 |
| Sensor clamp | | 1 |

Note: An encoder cable (model number: CBHE-E5M) is in the HSP Servo oil pump packaging

4 Braking resistor: BR1K0W5P8 (MH1000W)

**Shape & Dimension：**
**(Unit：min)**

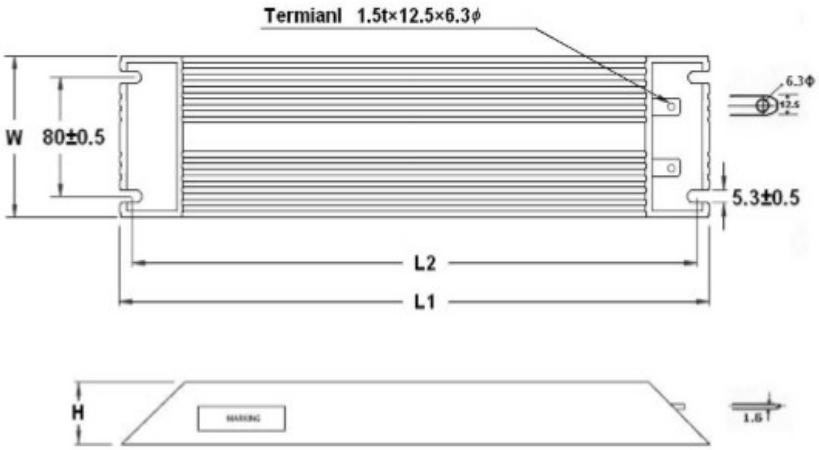


| TYPE | L1 ± 2 | L2 ± 2 | W ± 0.5 | H ± 0.5 |
|---|---|---|---|---|
| MH 1000 W | 400 | 385 | 100 | 50 |

## 07. HES250G23C

1 Servo controller: VFD370VL23A25GC

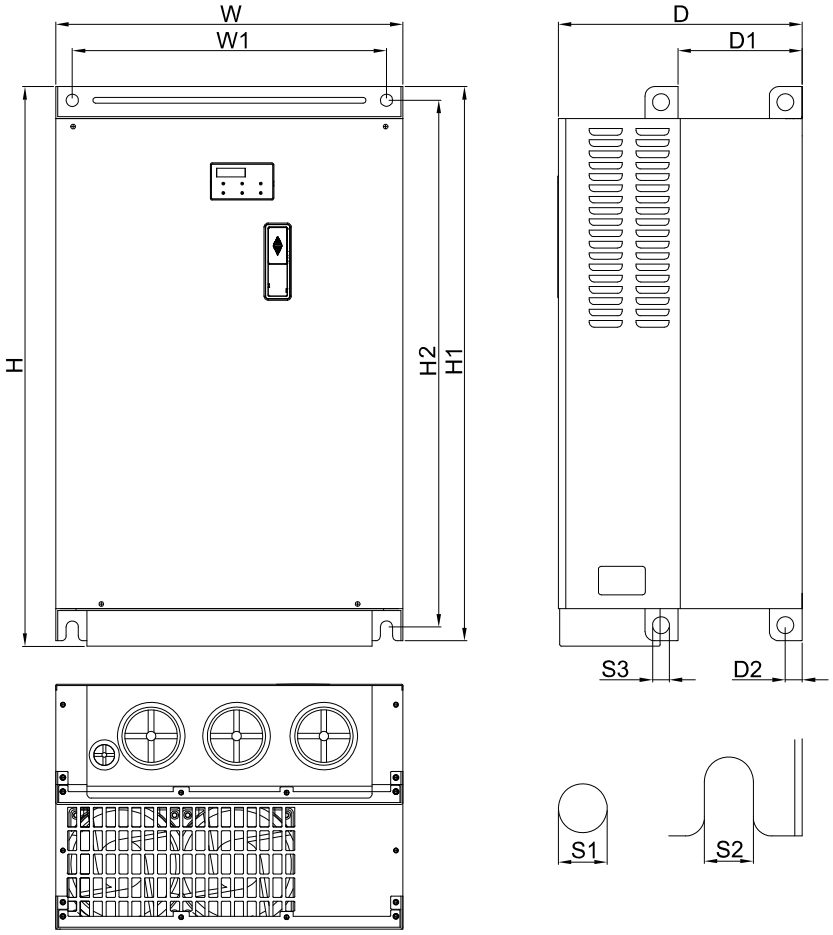


Unit：mm[inch]

| Frame | | W | H | D | W1 | H1 | H2 | D1 | D2 | S1 | S2 | S3 |
|---|---|---|---|---|---|---|---|---|---|---|---|---|
| E2 | mm | 370.0 | 595.0 | 260.0 | 335.0 | 589.0 | 560.0 | 132.5 | 18.0 | 13.0 | 13.0 | 18.0 |
| | inch | 14.57 | 23.43 | 10.24 | 13.19 | 23.1 | 22.05 | 5.22 | 0.71 | 0.51 | 0.51 | 0.71 |

2 Servo oil pump: HSP-100-270-23C

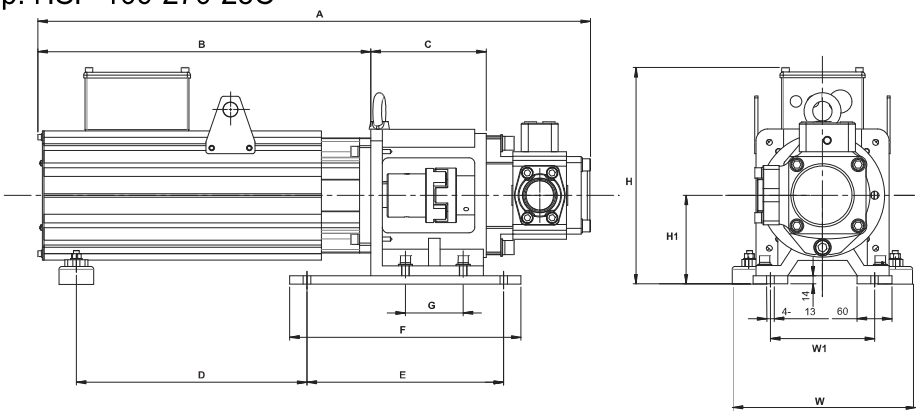


| component | model number | Quantity |
|---|---|---|
| Motor | MSJ-DR202HE42C | 1 |
| Oil pump | HSP-100-270-23C | 1 |

3 Accessory Kit: HESP-250-G-BC23

| component | model number | Quantity |
|---|---|---|
| ※ Braking resistor | BR1K0W5P8 (MH1000W) | 1 |
| Pressure sensor: WIKA A-10 | | 1 |
| Magnetic ring of power cable | | 3 |
| Sensor clamp | | 1 |

Note: An encoder cable (model number: CBHE-E5M) is in the HSP Servo oil pump packaging

4 Braking resistor: BR1K0W5P8 (MH1000W)

**Shape & Dimension：**
**(Unit：min)**

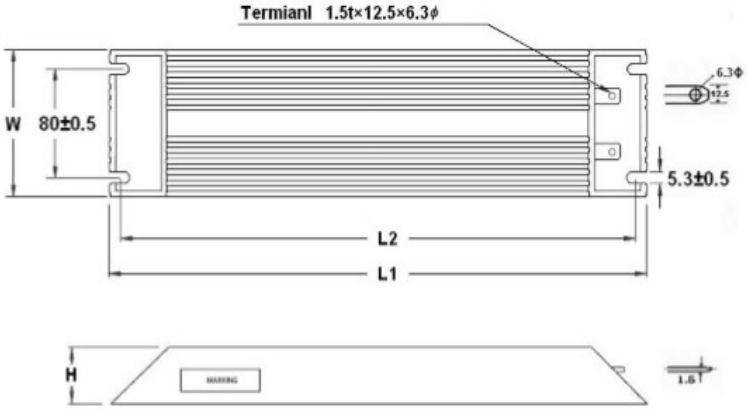


| TYPE | L1 ± 2 | L2 ± 2 | W ± 0.5 | H ± 0.5 |
|---|---|---|---|---|
| MH 1000 W | 400 | 385 | 100 | 50 |

## 08. HES063H43C

1 Servo controller: VFD110VL43A06HC

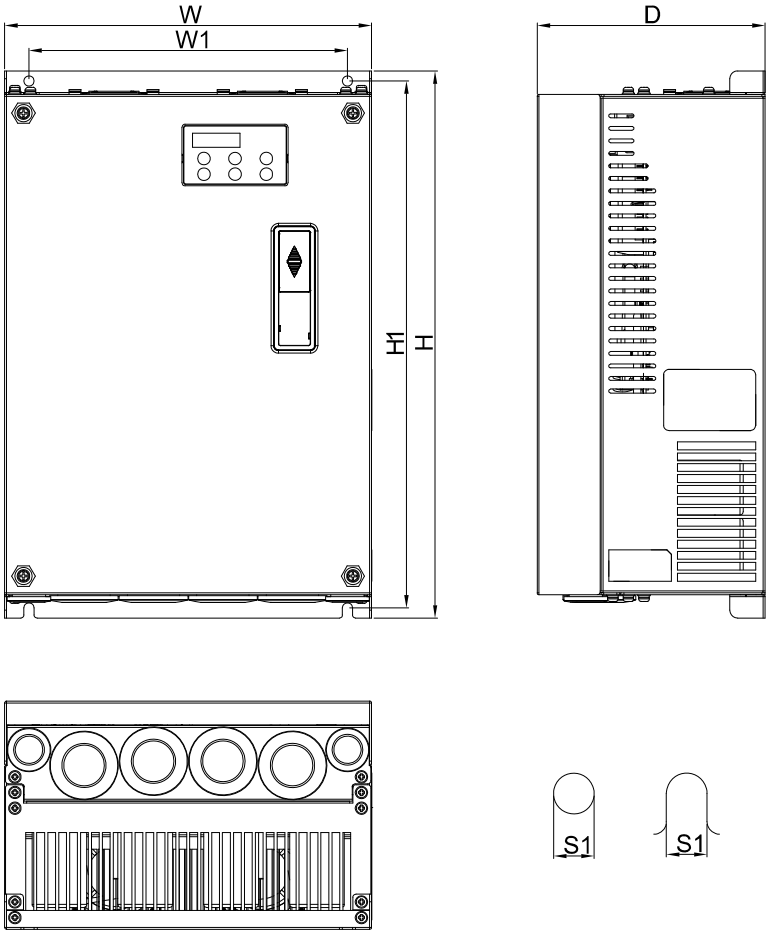


Unit：mm[inch]

| Frame | | W | H | D | W1 | H1 | S1 |
|---|---|---|---|---|---|---|---|
| C | mm | 235 | 350 | 146 | 204 | 337 | 6.5 |
| | inch | 9.25 | 13.78 | 5.75 | 8.03 | 13.27 | 0.26 |

2 Servo oil pump: HSP-025-100-43C

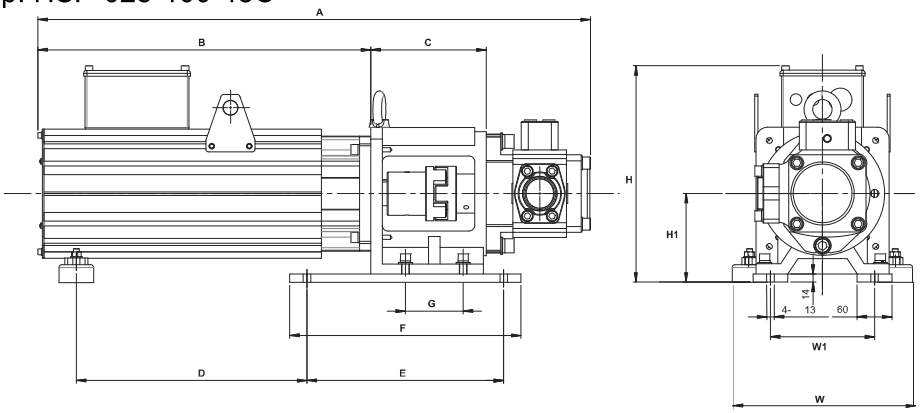


| component | model number | Quantity |
|---|---|---|
| Motor | MSJ-IR201AE42C | 1 |
| Oil pump | HSP-025-100-43C | 1 |

3 Accessory Kit: HESP-063-H-NC43

| component | model number | Quantity |
|---|---|---|
| ※ Braking resistor | BR300W025 (MH300W) | 1 |
| Pressure sensor: WIKA A-10 | | 1 |
| Magnetic ring of power cable | | 1 |
| Sensor clamp | | 1 |

Note: An encoder cable (model number: CBHE-E5M) is in the HSP Servo oil pump packaging

4 Braking resistor: BR300W025 (MH300W)

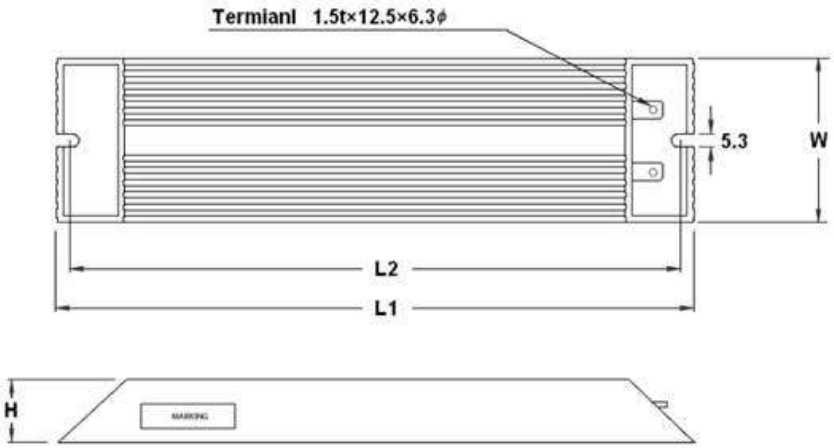


| TYPE | L1 ± 2 | L2 ± 2 | W ± 0.5 | H ± 0.5 |
|---|---|---|---|---|
| MH 300 W | 215 | 200 | 60 | 30 |

## 09. HES080H43C

1 Servo controller: VFD150VL43B08HC

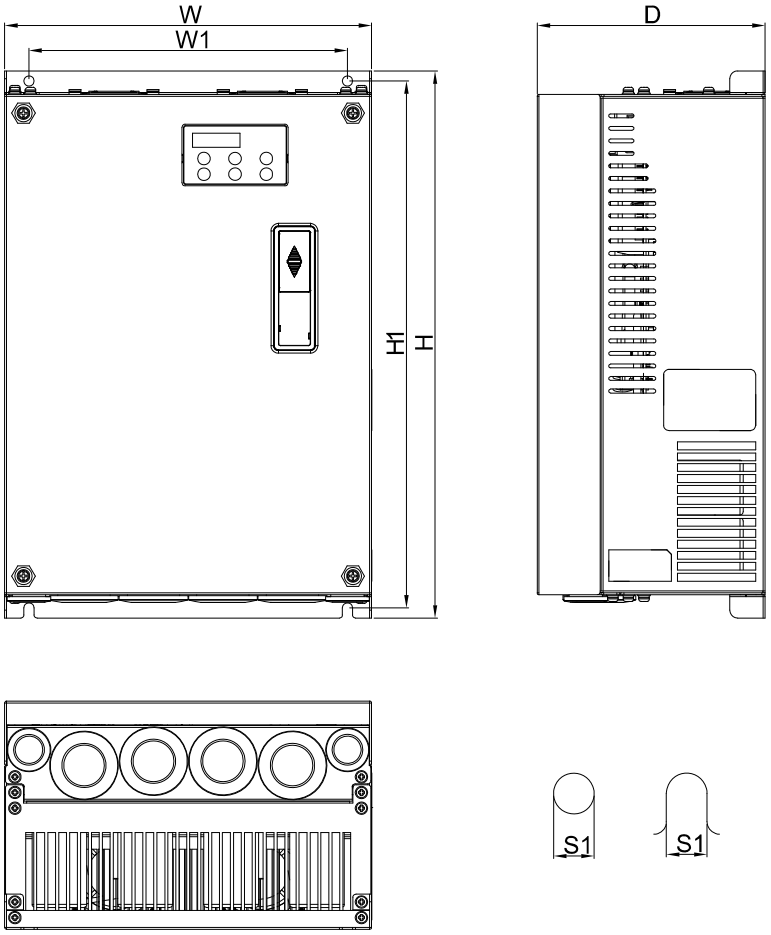


Unit：mm[inch]

| Frame | | W | H | D | W1 | H1 | S1 |
|---|---|---|---|---|---|---|---|
| C | mm | 235 | 350 | 146 | 204 | 337 | 6.5 |
| | inch | 9.25 | 13.78 | 5.75 | 8.03 | 13.27 | 0.26 |

2 Servo oil pump: HSP-032-100-43C

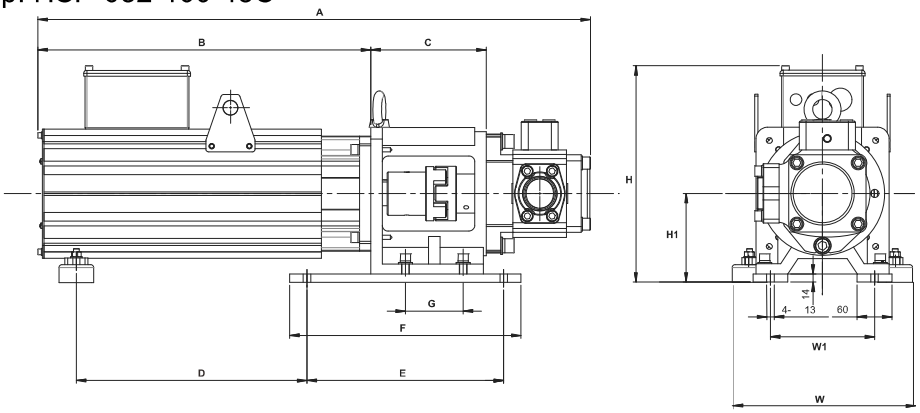


| component | model number | Quantity |
|---|---|---|
| Motor | MSJ-IR201AE42C | 1 |
| Oil pump | HSP-032-100-43C | 1 |

3 Accessory Kit: HESP-080-H-NC43

| component | model number | Quantity |
|---|---|---|
| ※ Braking resistor | BR300W025 (MH300W) | 1 |
| Pressure sensor: WIKA A-10 | | 1 |
| Magnetic ring of power cable | | 1 |
| Sensor clamp | | 1 |

Note: An encoder cable (model number: CBHE-E5M) is in the HSP Servo oil pump packaging

4 Braking resistor: BR300W025 (MH300W)

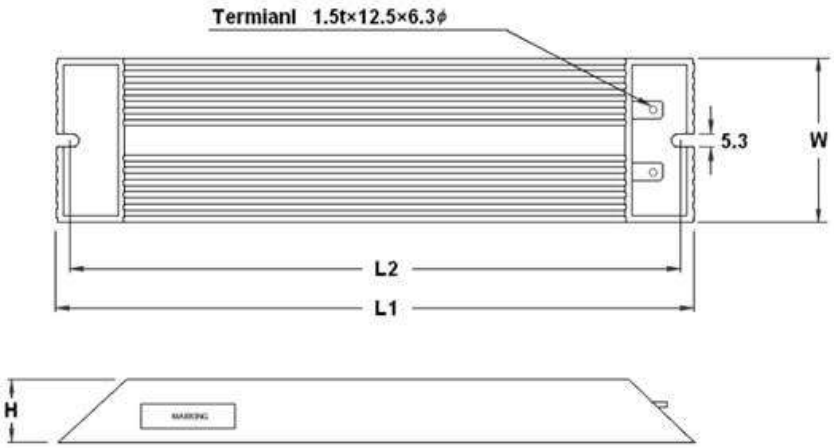


| TYPE | L1 ± 2 | L2 ± 2 | W ± 0.5 | H ± 0.5 |
|---|---|---|---|---|
| MH 300 W | 215 | 200 | 60 | 30 |

## 10. HES100H43C

1 Servo controller: VFD185VL43B10HC

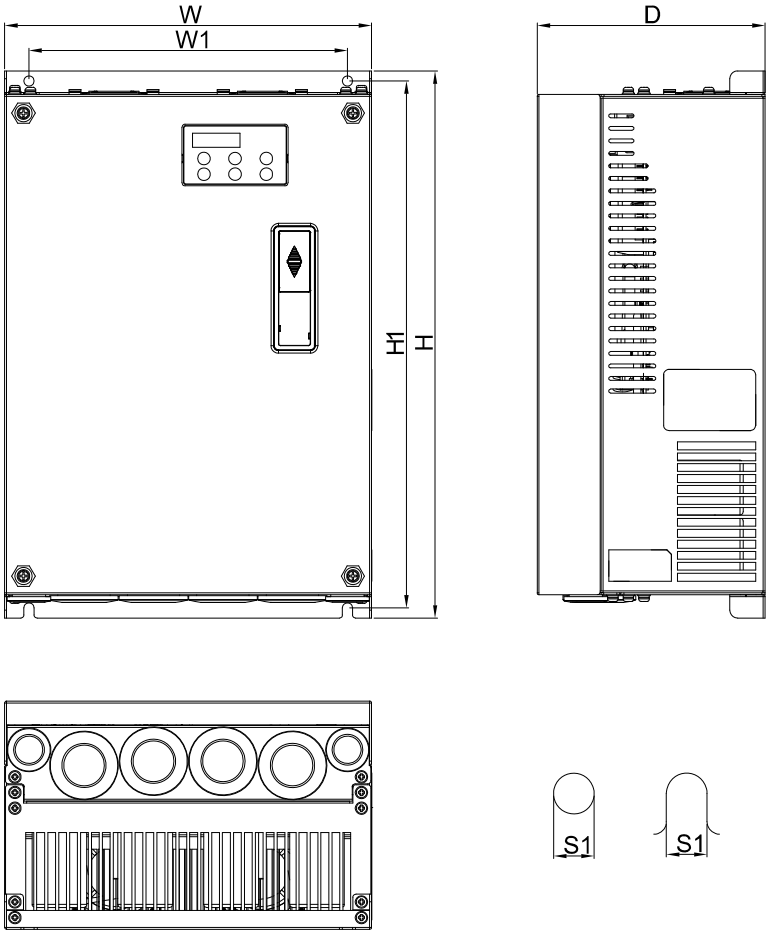


Unit：mm[inch]

| Frame | | W | H | D | W1 | H1 | S1 |
|---|---|---|---|---|---|---|---|
| C | mm | 235 | 350 | 146 | 204 | 337 | 6.5 |
| | inch | 9.25 | 13.78 | 5.75 | 8.03 | 13.27 | 0.26 |

2 Servo oil pump: HSP-040-140-43C

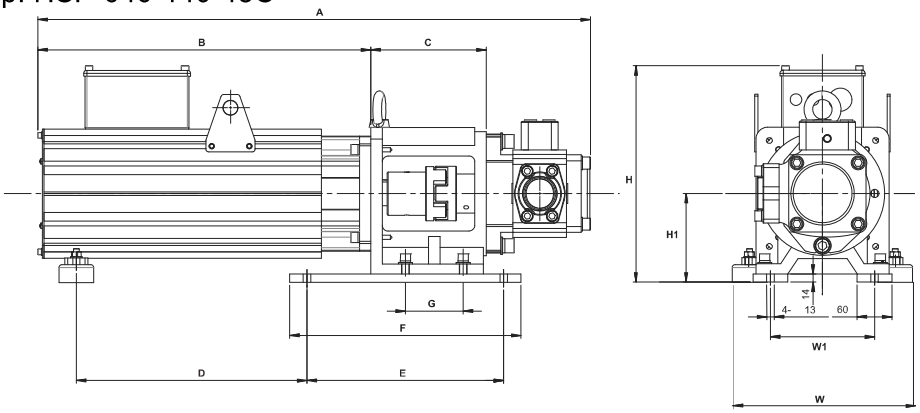


| component | model number | Quantity |
|---|---|---|
| Motor | MSJ-IR201EE42C | 1 |
| Oil pump | HSP-040-140-43C | 1 |

3 Accessory Kit: HESP-100-H-NC43

| component | model number | Quantity |
|---|---|---|
| ※ Braking resistor | BR300W025 (MH300W) | 1 |
| Pressure sensor: WIKA A-10 | | 1 |
| Magnetic ring of power cable | | 1 |
| Sensor clamp | | 1 |

Note: An encoder cable (model number: CBHE-E5M) is in the HSP Servo oil pump packaging

4 Braking resistor: BR1K0W025 (MH1000W)

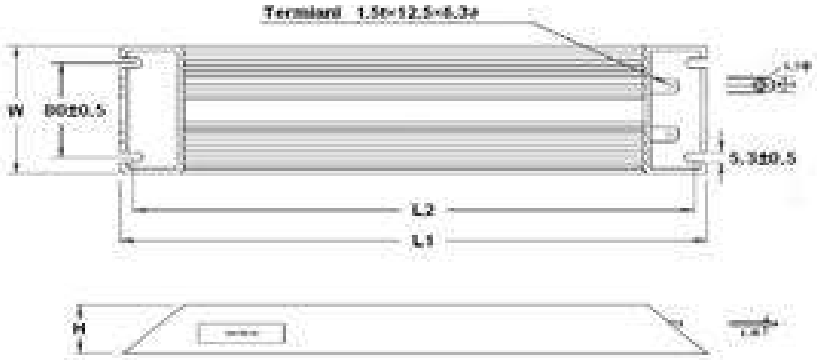


| TYPE | L1 ± 2 | L2 ± 2 | W ± 0.5 | H ± 0.5 |
|---|---|---|---|---|
| MH 1000 W | 400 | 385 | 100 | 50 |

## 11. HES125H43C

1 Servo controller: VFD220VL43A12HC

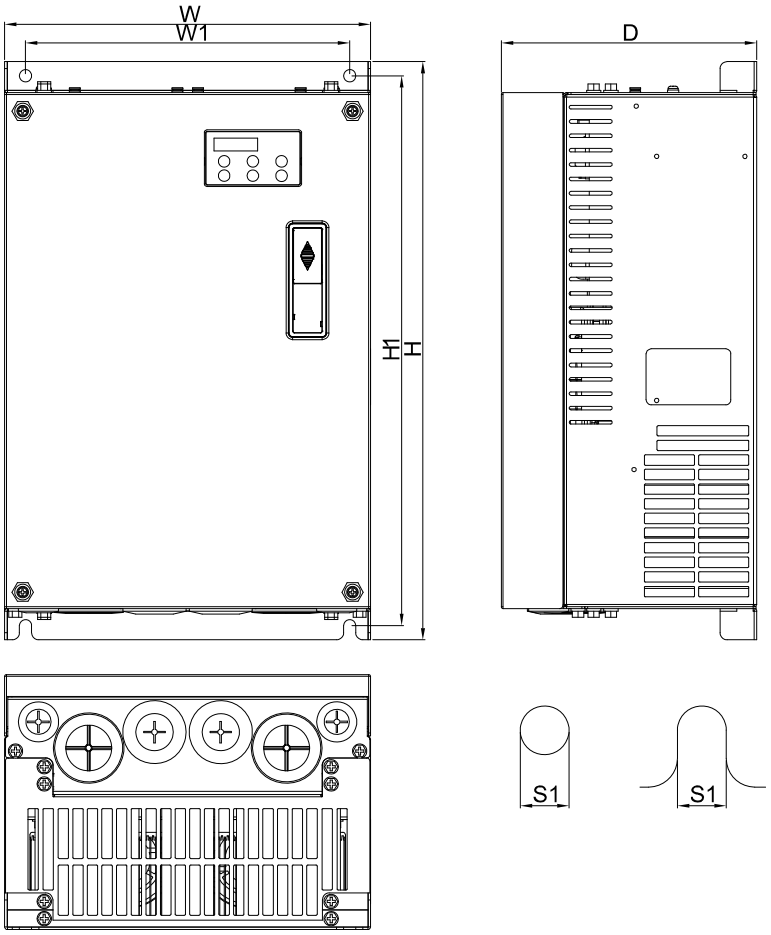


Unit：mm[inch]

| Frame | | W | H | D | W1 | H1 | S1 |
|---|---|---|---|---|---|---|---|
| D | mm | 255 | 403.8 | 168.0 | 226.0 | 384 | 8.5 |
| | inch | 10.04 | 15.90 | 6.61 | 8.90 | 15.12 | 0.33 |

2 Servo oil pump: HSP-050-180-43C

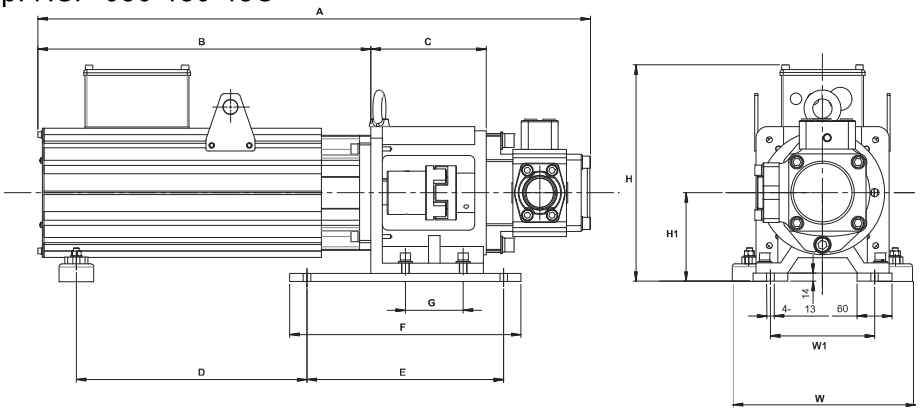


| component | model number | Quantity |
|---|---|---|
| Motor | MSJ-IR201IE42C | 1 |
| Oil pump | HSP-050-180-43C | 1 |

3 Accessory Kit: HESP-125-H-NC43

| component | model number | Quantity |
|---|---|---|
| Braking resistor | BR1K0W025 (MH1000W) | 1 |
| Pressure sensor: WIKA A-10 | | 1 |
| Magnetic ring of power cable | | 3 |
| Sensor clamp | | 1 |

Note: An encoder cable (model number: CBHE-E5M) is in the HSP Servo oil pump packaging

4 Braking resistor: BR1K0W025 (MH1000W)

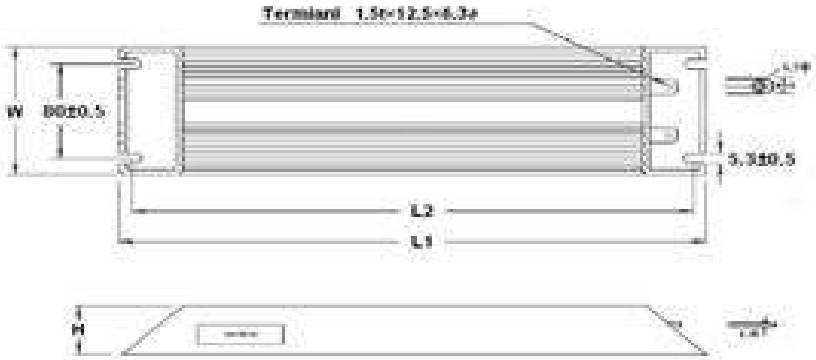


| TYPE | L1 ± 2 | L2 ± 2 | W ± 0.5 | H ± 0.5 |
|---|---|---|---|---|
| MH 1000 W | 400 | 385 | 100 | 50 |

## 12. HES160H43C

1 Servo controller: VFD300VL43B16HC

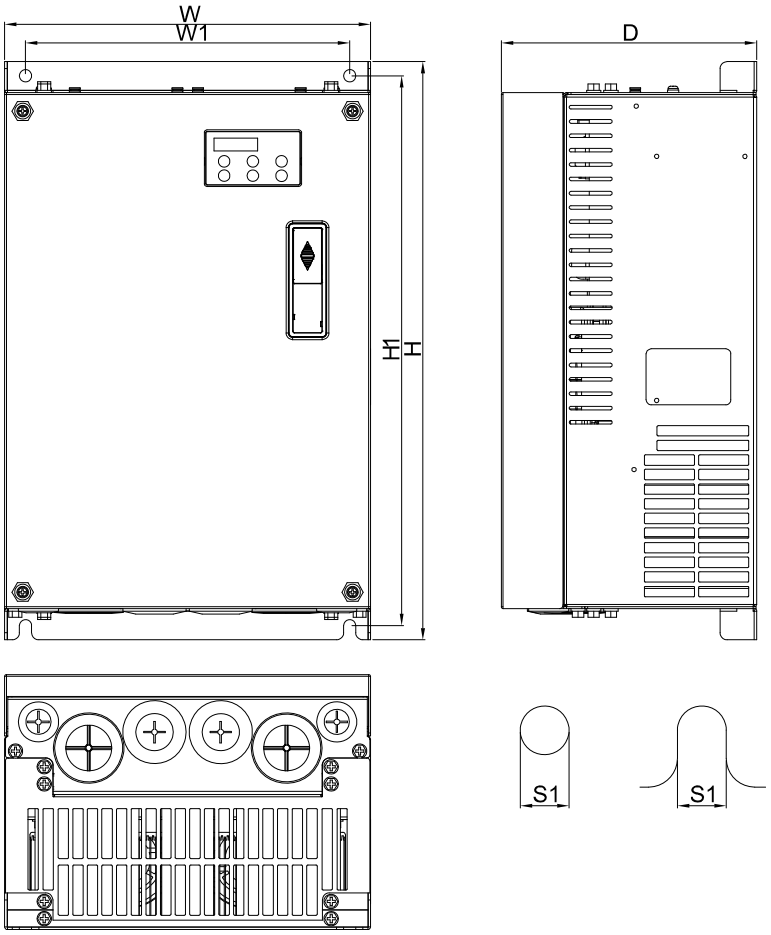


Unit：mm[inch]

| Frame | | W | H | D | W1 | H1 | S1 |
|---|---|---|---|---|---|---|---|
| D | mm | 255 | 403.8 | 168.0 | 226.0 | 384 | 8.5 |
| | inch | 10.04 | 15.90 | 6.61 | 8.90 | 15.12 | 0.33 |

2 Servo oil pump: HSP-064-230-43C

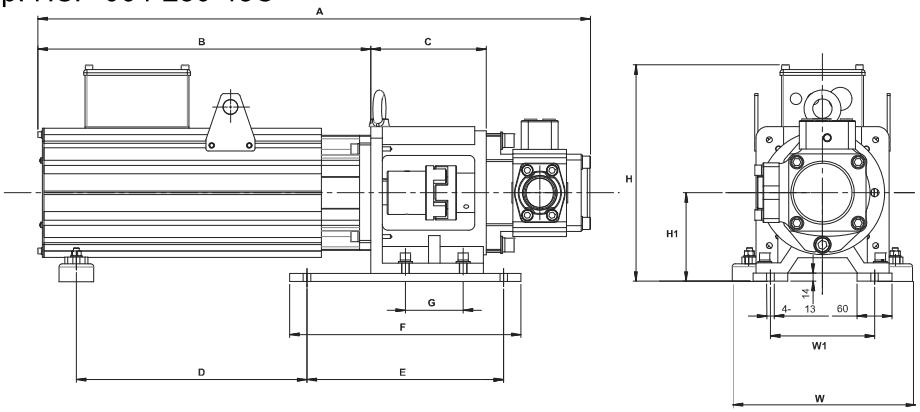


| component | model number | Quantity |
|---|---|---|
| Motor | MSJ-OR202DE42C | 1 |
| Oil pump | HSP-064-230-43C | 1 |

3 Accessory Kit: HESP-160-H-NC43

| component | model number | Quantity |
|---|---|---|
| Braking resistor | MHR1K0W014 (MH1000W) | 1 |
| Pressure sensor: WIKA A-10 | | 1 |
| Magnetic ring of power cable | | 3 |
| Sensor clamp | | 1 |

Note: An encoder cable (model number: CBHE-E5M) is in the HSP Servo oil pump packaging

4 Braking resistor: MHR1K0W014 (MH1000W)

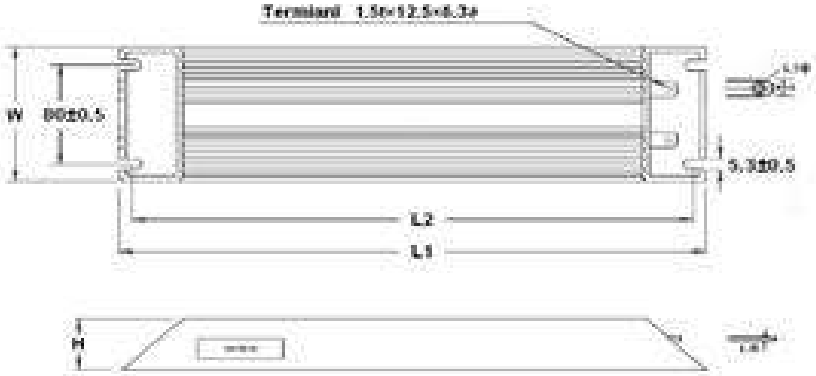


| TYPE | L1 ± 2 | L2 ± 2 | W ± 0.5 | H ± 0.5 |
|---|---|---|---|---|
| MH 1000 W | 400 | 385 | 100 | 50 |

## 13. HES200H43C

1 Servo controller: VFD300VL43B20HC

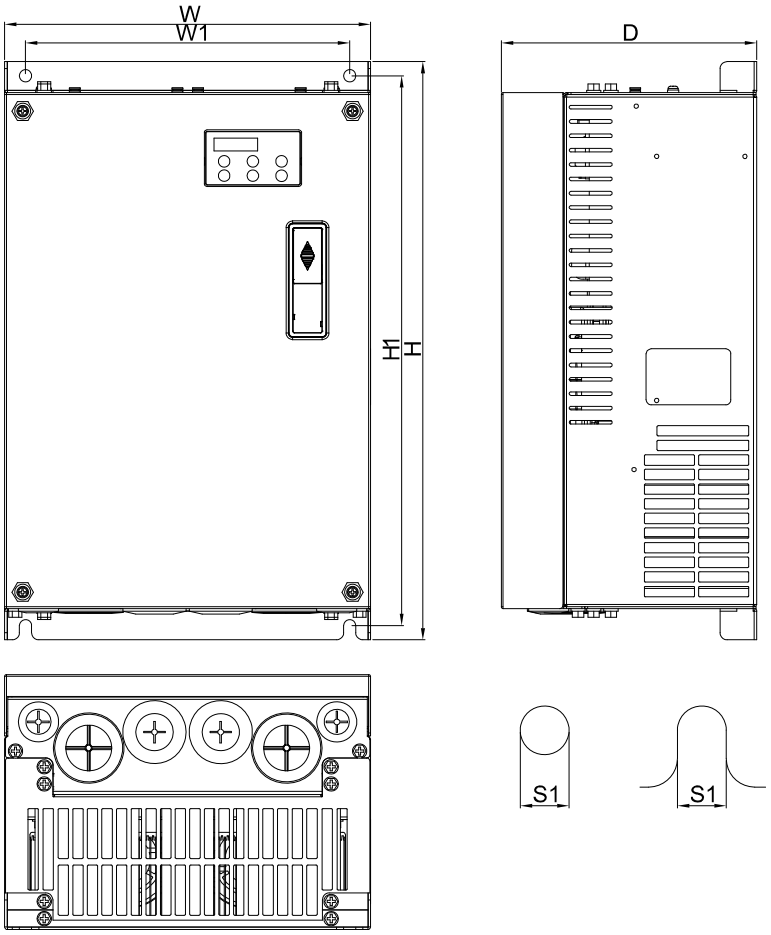


Unit：mm[inch]

| Frame | | W | H | D | W1 | H1 | S1 |
|---|---|---|---|---|---|---|---|
| D | mm | 255 | 403.8 | 168.0 | 226.0 | 384 | 8.5 |
| | inch | 10.04 | 15.90 | 6.61 | 8.90 | 15.12 | 0.33 |

2 Servo oil pump: HSP-080-250-43C

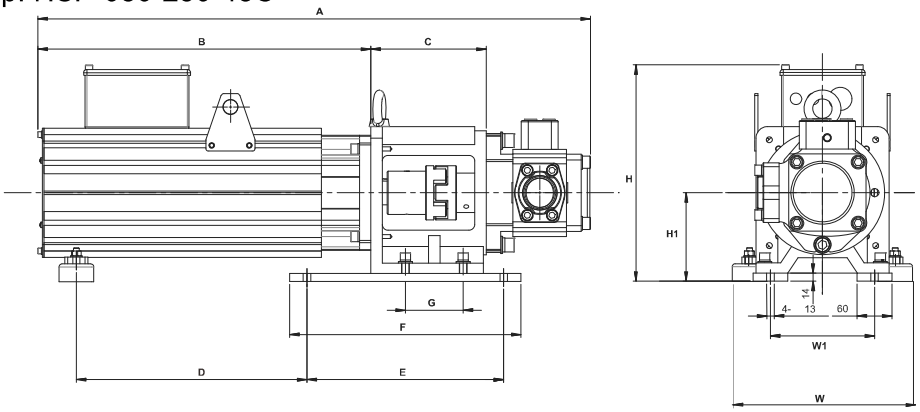


| component | model number | Quantity |
|---|---|---|
| Motor | MSJ-LR202FE42C | 1 |
| Oil pump | HSP-080-250-43C | 1 |

3 Accessory Kit: HESP-200-H-NC43

| component | model number | Quantity |
|---|---|---|
| Braking resistor | MHR1K0W014 (MH1000W) | 1 |
| Pressure sensor: WIKA A-10 | | 1 |
| Magnetic ring of power cable | | 3 |
| Sensor clamp | | 1 |

Note: An encoder cable (model number: CBHE-E5M) is in the HSP Servo oil pump packaging

4 Braking resistor: MHR1K0W014 (MH1000W)

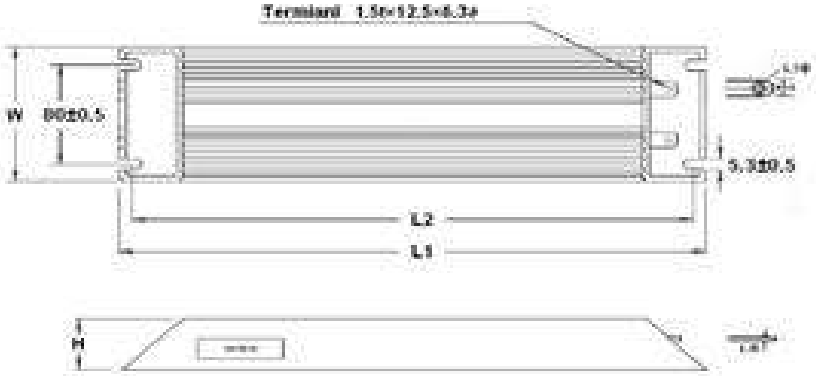


| TYPE | L1 ± 2 | L2 ± 2 | W ± 0.5 | H ± 0.5 |
|---|---|---|---|---|
| MH 1000 W | 400 | 385 | 100 | 50 |

## 14. HES250M43C

1 Servo controller: VFD550VL43A25MC

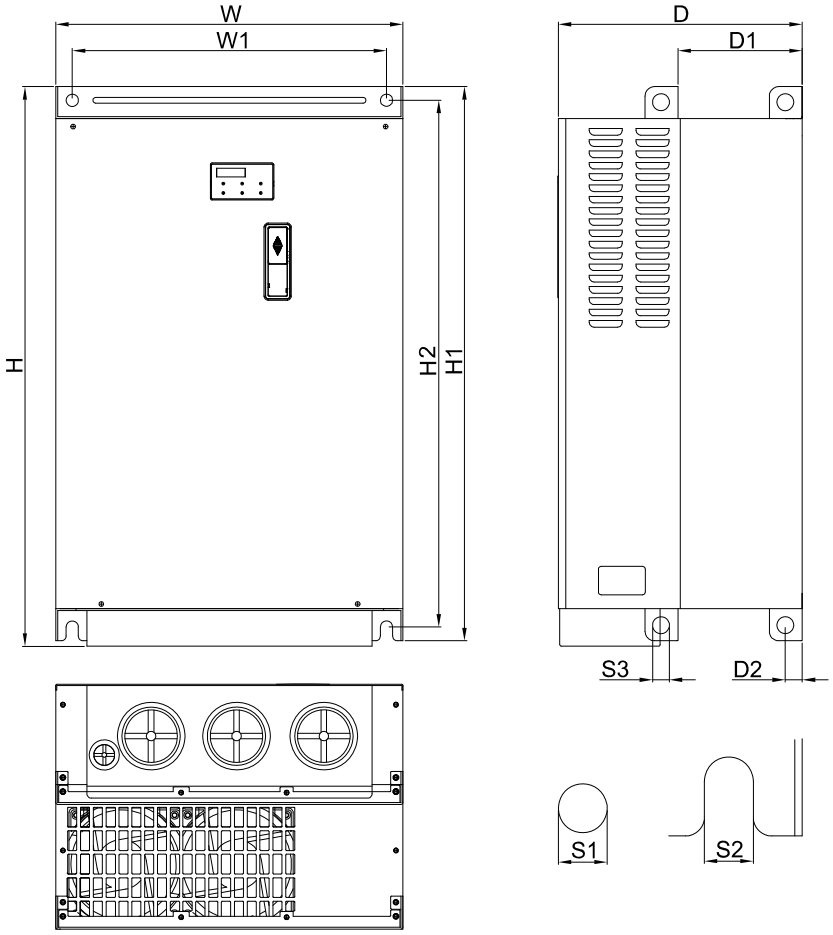


Unit：mm[inch]

| Frame | | W | H | D | W1 | H1 | H2 | D1 | D2 | S1 | S2 | S3 |
|---|---|---|---|---|---|---|---|---|---|---|---|---|
| E2 | mm | 370.0 | 595.0 | 260.0 | 335.0 | 589.0 | 560.0 | 132.5 | 18.0 | 13.0 | 13.0 | 18.0 |
| | inch | 14.57 | 23.43 | 10.24 | 13.19 | 23.1 | 22.05 | 5.22 | 0.71 | 0.51 | 0.51 | 0.71 |

2 Servo oil pump: HSP-125-450-43C

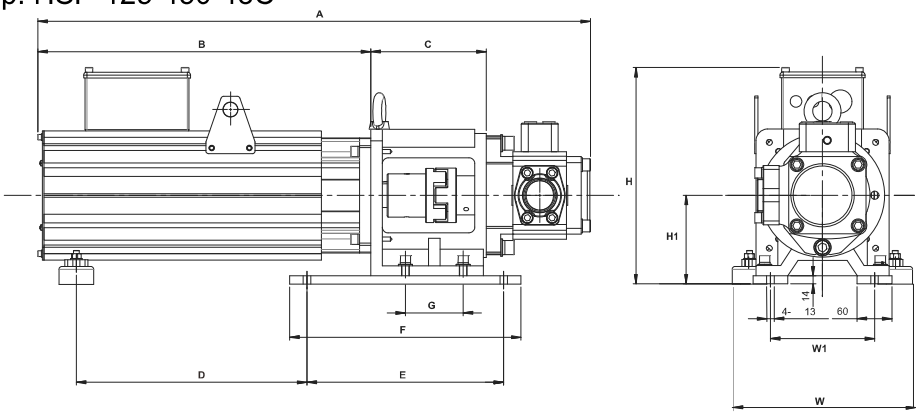


| component | model number | Quantity |
|---|---|---|
| Motor | MSJ-OR264FE48C | 1 |
| Oil pump | HSP-125-450-43C | 1 |

3 Accessory Kit: HESP-250-M-BC43

| component | model number | Quantity |
|---|---|---|
| Braking resistor | MHR1K5W013 (MH1500W) | 1 |
| Braking resistor | | 1 |
| Pressure sensor: WIKA A-10 | | 1 |
| Magnetic ring of power cable | | 3 |
| Sensor clamp | | 1 |
| Casing tube | | 1 |

Note: An encoder cable (model number: CBHE-E5M) is in the HSP Servo oil pump packaging

4 Braking resistor: MHR1K5W013 (MH1500W)

**(Unit：min)**

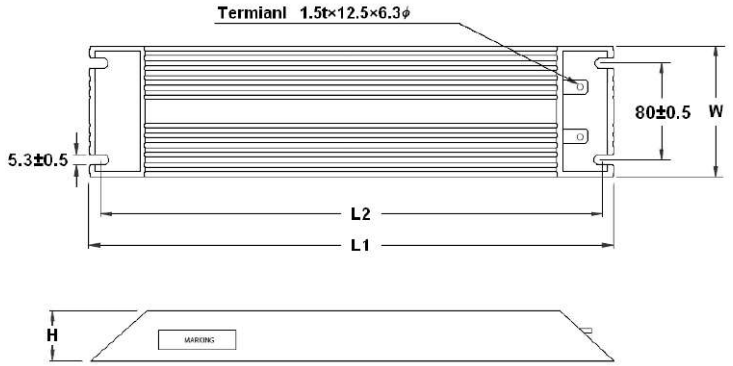


| TYPE | L1 ± 2 | L2 ± 2 | H ± 1 | W ± 1 |
|---|---|---|---|---|
| MH 1500 W | 550 | 535 | 50 | 100 |

## 15. HES320M43C

1 Servo controller: VFD550VL43A32MC

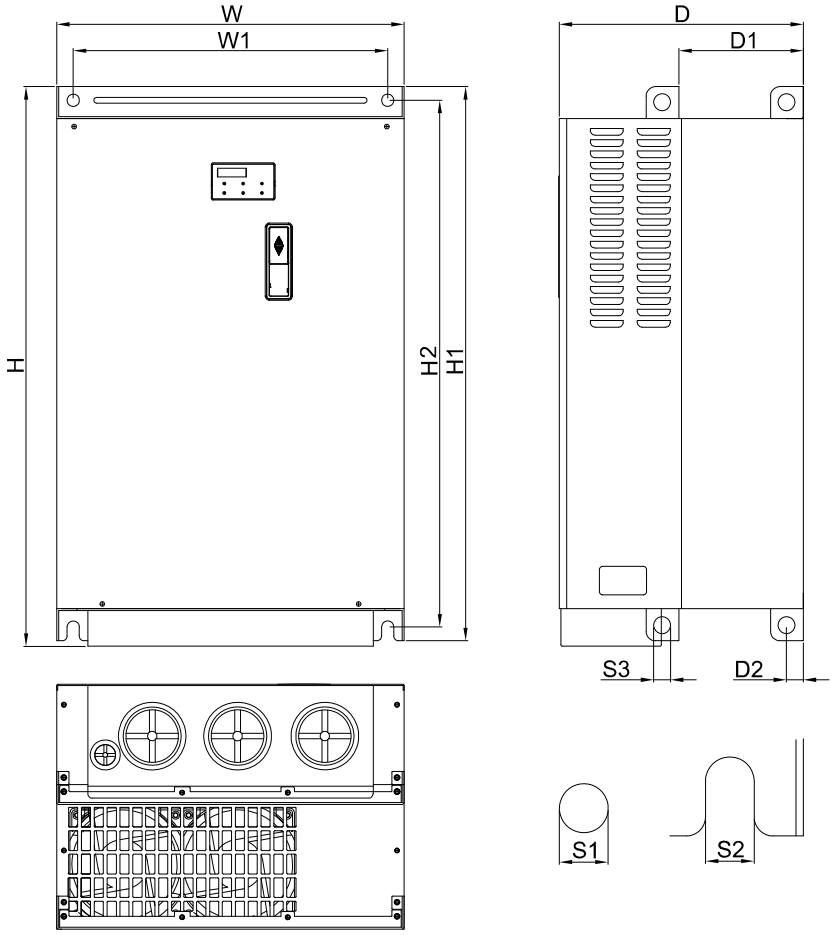


Unit：mm[inch]

| Frame | | W | H | D | W1 | H1 | H2 | D1 | D2 | S1 | S2 | S3 |
|---|---|---|---|---|---|---|---|---|---|---|---|---|
| E2 | mm | 370.0 | 595.0 | 260.0 | 335.0 | 589.0 | 560.0 | 132.5 | 18.0 | 13.0 | 13.0 | 18.0 |
| | inch | 14.57 | 23.43 | 10.24 | 13.19 | 23.1 | 22.05 | 5.22 | 0.71 | 0.51 | 0.51 | 0.71 |

2 Servo oil pump: HSP-160-520-43C

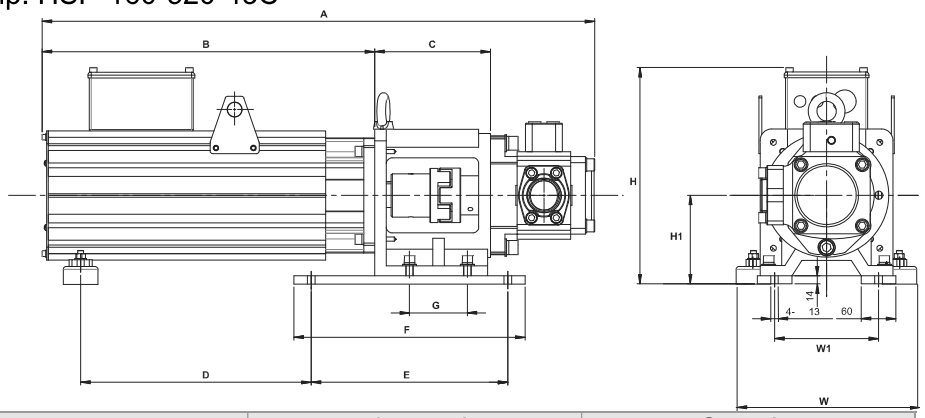


| component | model number | Quantity |
|---|---|---|
| Motor | MSJ-IR265CE48C | 1 |
| Oil pump | HSP-160-520-43C | 1 |

3 Accessory Kit: HESP-320-M-BC43

| component | model number | Quantity |
|---|---|---|
| Braking resistor | MHR1K5W013 (MH1500W) | 1 |
| Braking resistor | | 1 |
| Pressure sensor: WIKA A-10 | | 1 |
| Magnetic ring of power cable | | 3 |
| Sensor clamp | | 1 |
| Casing tube | | 1 |

Note: An encoder cable (model number: CBHE-E5M) is in the HSP Servo oil pump packaging

4 Braking resistor: MHR1K5W013 (MH1500W)

**(Unit：min)**

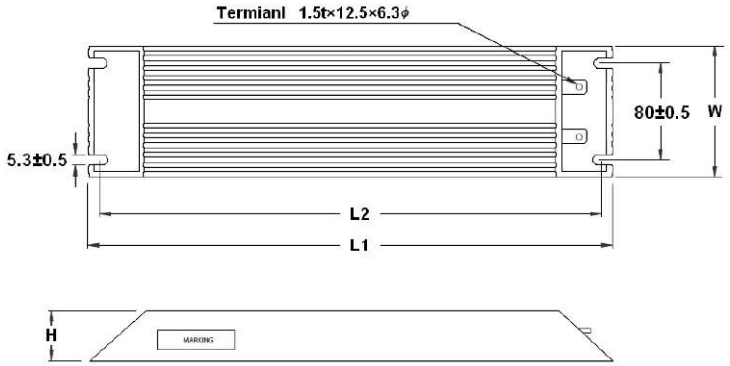


| TYPE | L1 ± 2 | L2 ± 2 | H ± 1 | W ± 1 |
|---|---|---|---|---|
| MH 1500 W | 550 | 535 | 50 | 100 |

## 16. HES063M43C

1 Servo controller: VFD150VL43B06MC

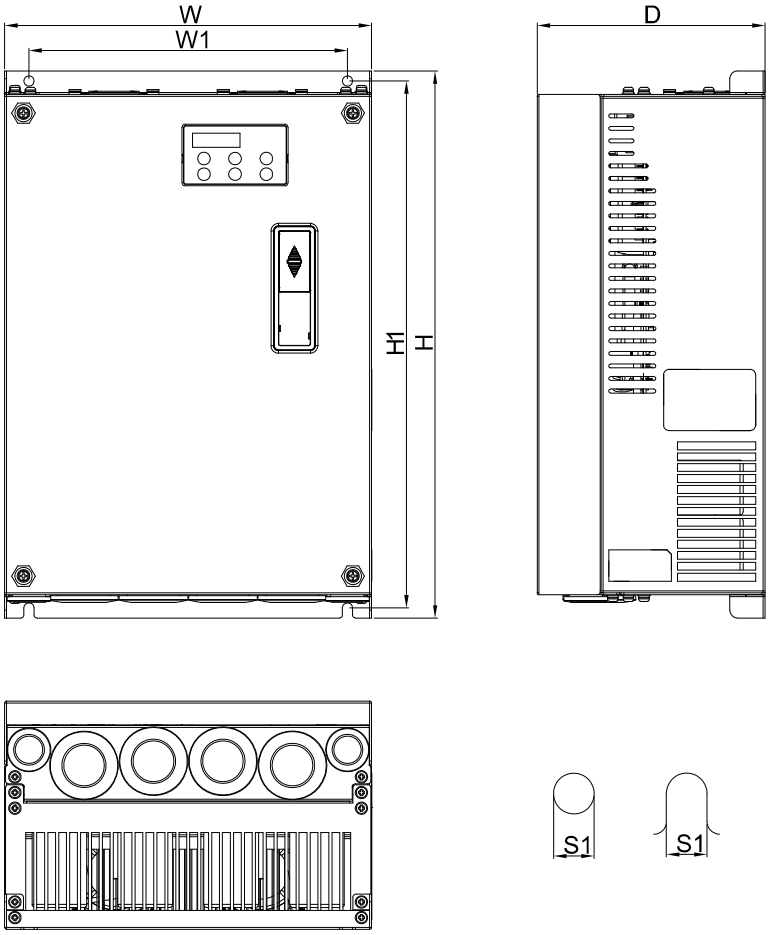


Unit：mm[inch]

| Frame | | W | H | D | W1 | H1 | S1 |
|---|---|---|---|---|---|---|---|
| C | mm | 235 | 350 | 146 | 204 | 337 | 6.5 |
| | inch | 9.25 | 13.78 | 5.75 | 8.03 | 13.27 | 0.26 |

2 Servo oil pump: HSP-032-100-43C

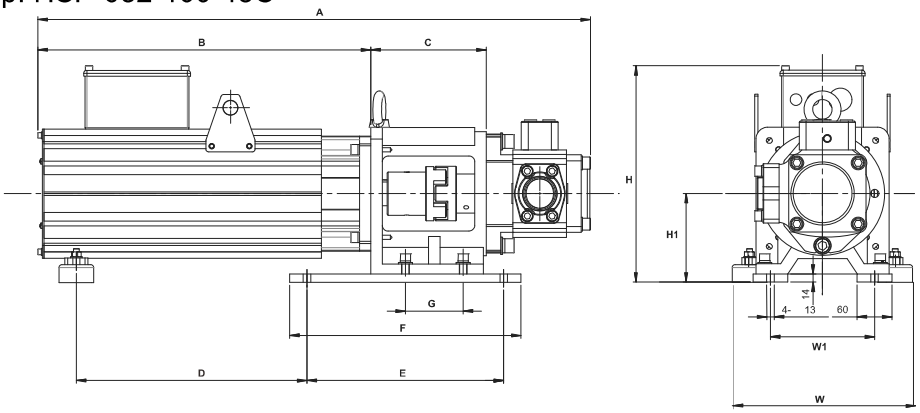


| component | model number | Quantity |
|---|---|---|
| Motor | MSJ-IR201AE42C | 1 |
| Oil pump | HSP-032-100-43C | 1 |

3 Accessory Kit: HESP-063-M-NC43

| component | model number | Quantity |
|---|---|---|
| Braking resistor | BR300W025 (MH300W) | 1 |
| Pressure sensor: WIKA A-10 | | 1 |
| Magnetic ring of power cable | | 1 |
| Sensor clamp | | 1 |
| Casing tube | | 1 |

Note: An encoder cable (model number: CBHE-E5M) is in the HSP Servo oil pump packaging

4: Braking resistor: BR300W025 (MH300W)

(Unit：mm)

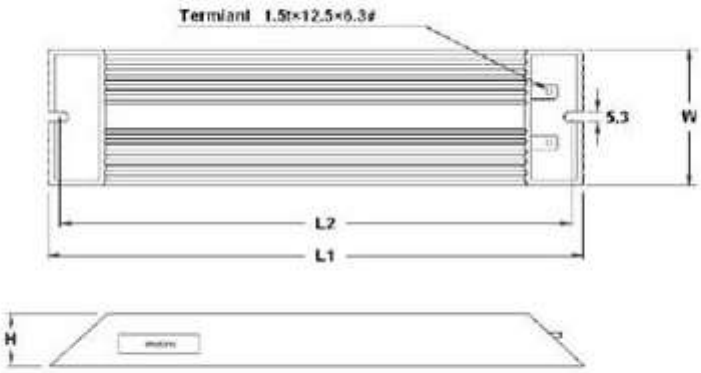


| TYPE | L1 ± 2 | L2 ± 2 | W ± 0.5 | H ± 0.5 |
|---|---|---|---|---|
| MH 300 W | 215 | 200 | 60 | 30 |

## 17. HES080M43C

1 Servo controller: VFD185VL43B08MC

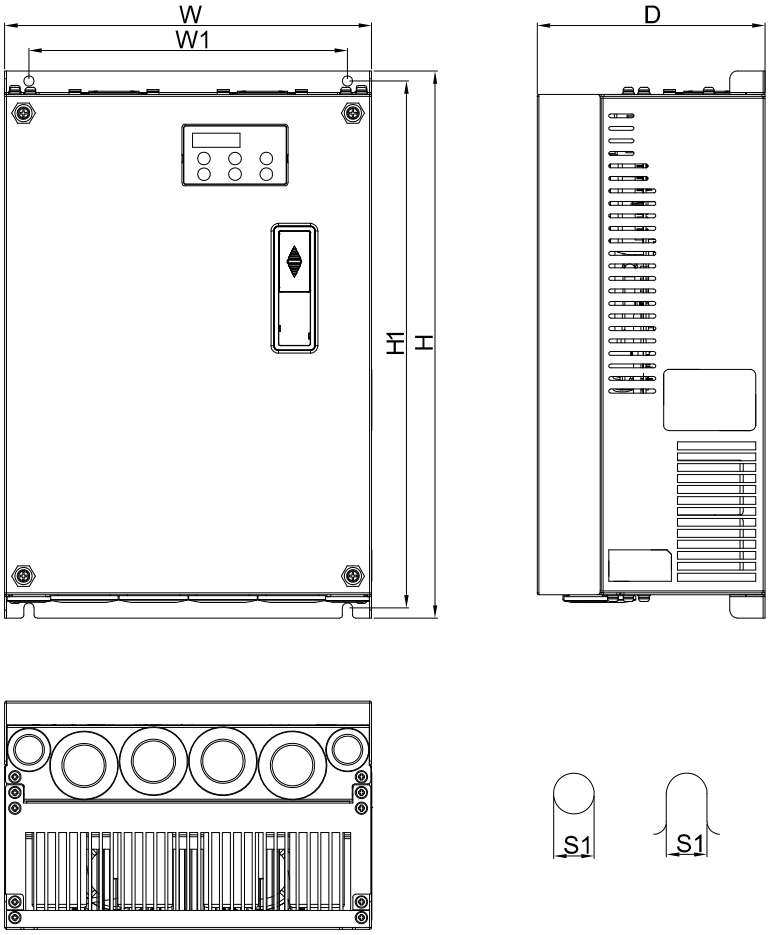


Unit：mm[inch]

| Frame | | W | H | D | W1 | H1 | S1 |
|---|---|---|---|---|---|---|---|
| C | mm | 235 | 350 | 146 | 204 | 337 | 6.5 |
| | inch | 9.25 | 13.78 | 5.75 | 8.03 | 13.27 | 0.26 |

2 Servo oil pump: HSP-040-100-43C

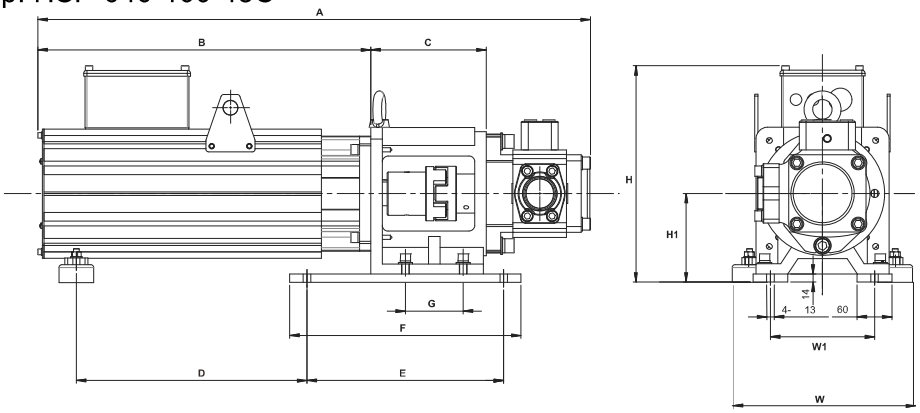


| component | model number | Quantity |
|---|---|---|
| Motor | MSJ-IR201AE42C | 1 |
| Oil pump | HSP-040-100-43C | 1 |

3 Accessory Kit: HESP-080-M-NC43

| component | model number | Quantity |
|---|---|---|
| Braking resistor | BR300W025 (MH300W) | 1 |
| Pressure sensor: WIKA A-10 | | 1 |
| Magnetic ring of power cable | | 1 |
| Sensor clamp | | 1 |
| Casing tube | | 1 |

Note: An encoder cable (model number: CBHE-E5M) is in the HSP Servo oil pump packaging

4: Braking resistor: BR300W025 (MH300W)

(Unit：min)

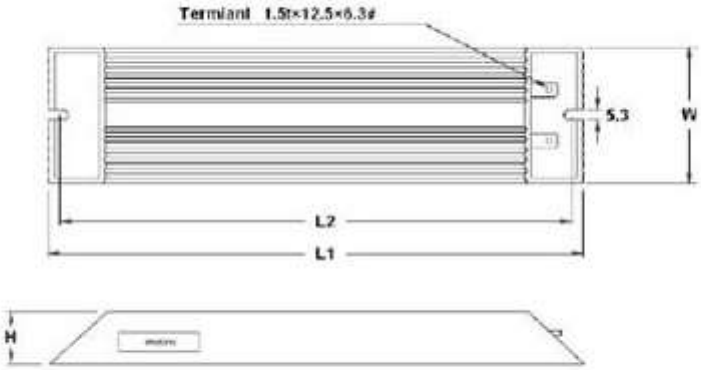


| TYPE | L1 ± 2 | L2 ± 2 | W ± 0.5 | H ± 0.5 |
|---|---|---|---|---|
| MH 300 W | 215 | 200 | 60 | 30 |

## 18. HES100M43C

1 Servo controller: VFD220VL43B12MC

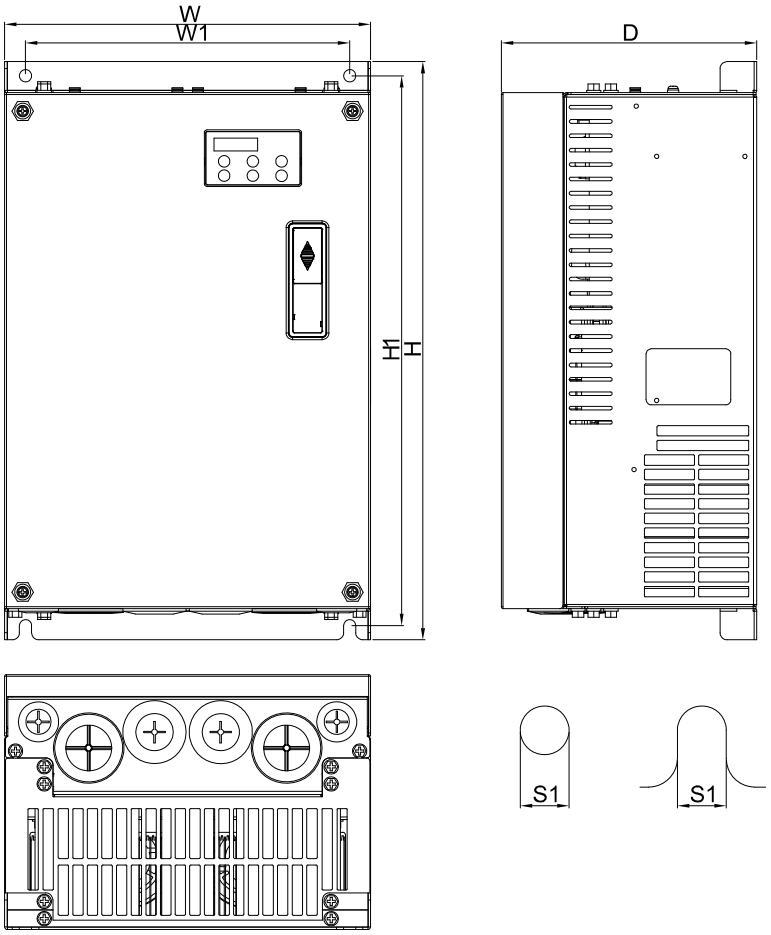


Unit：mm [inch]

| Frame | | W | H | D | W1 | H1 | S1 |
|---|---|---|---|---|---|---|---|
| D | mm | 255 | 403.8 | 168.0 | 226.0 | 384 | 8.5 |
| | inch | 10.04 | 15.90 | 6.61 | 8.90 | 15.12 | 0.33 |

2 Servo oil pump: HSP-050-140-43C

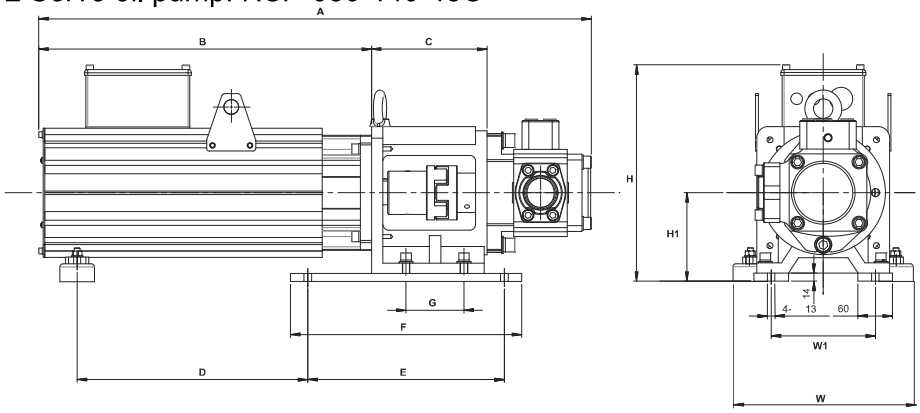


| component | model number | Quantity |
|---|---|---|
| Motor | MSJ-IR201EE42C | 1 |
| Oil pump | HSP-050-140-43C | 1 |

3 Accessory Kit: HESP-100-M-NC43

| component | model number | Quantity |
|---|---|---|
| Braking resistor | BR1K0W025 (MH1000W) | 1 |
| Pressure sensor: WIKA A-10 | | 1 |
| Magnetic ring of power cable | | 1 |
| Sensor clamp | | 1 |
| Casing tube | | 1 |

Note: An encoder cable (model number: CBHE-E5M) is in the HSP Servo oil pump packaging

4: Braking resistor: BR1K0W025 (MH1000W):

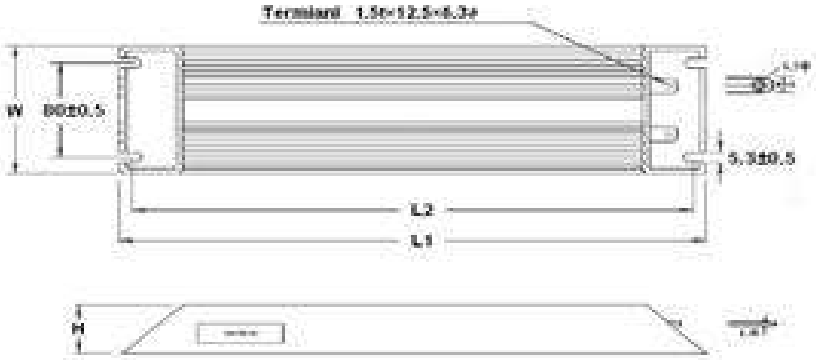


| TYPE | L1 ± 2 | L2 ± 2 | W ± 0.5 | H ± 0.5 |
|---|---|---|---|---|
| MH 1000 W | 400 | 385 | 100 | 50 |

## 19. HES125M43C

1 Servo controller: VFD300VL43B12MC

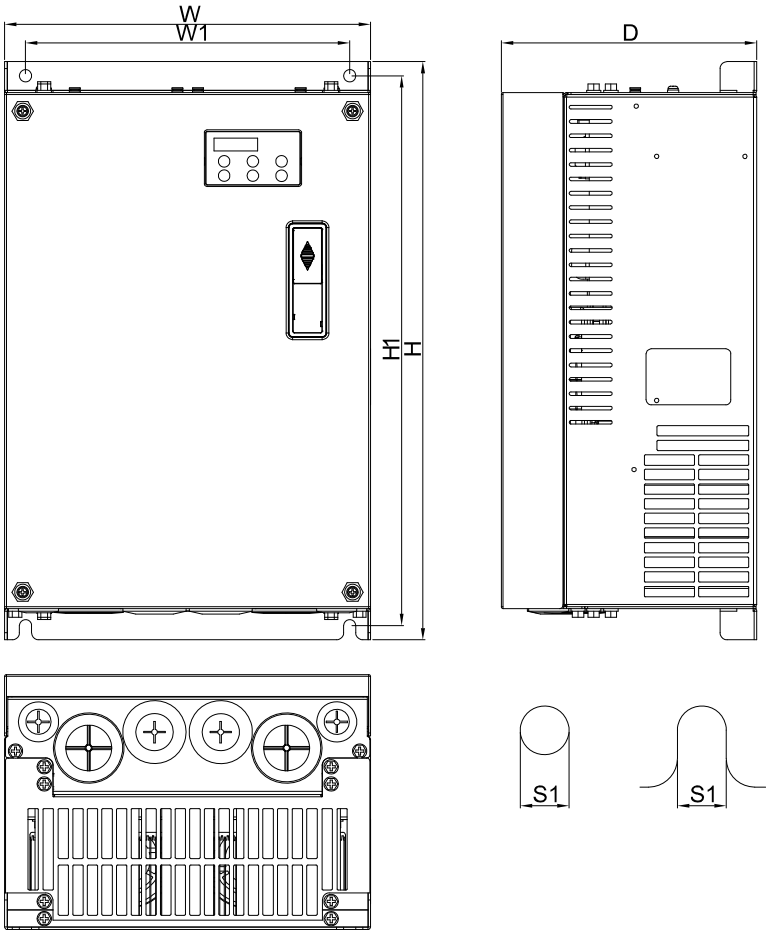


Unit：mm[inch]

| Frame | | W | H | D | W1 | H1 | S1 |
|---|---|---|---|---|---|---|---|
| D | mm | 255 | 403.8 | 168.0 | 226.0 | 384 | 8.5 |
| | inch | 10.04 | 15.90 | 6.61 | 8.90 | 15.12 | 0.33 |

2 Servo oil pump: HSP-064-180-43C

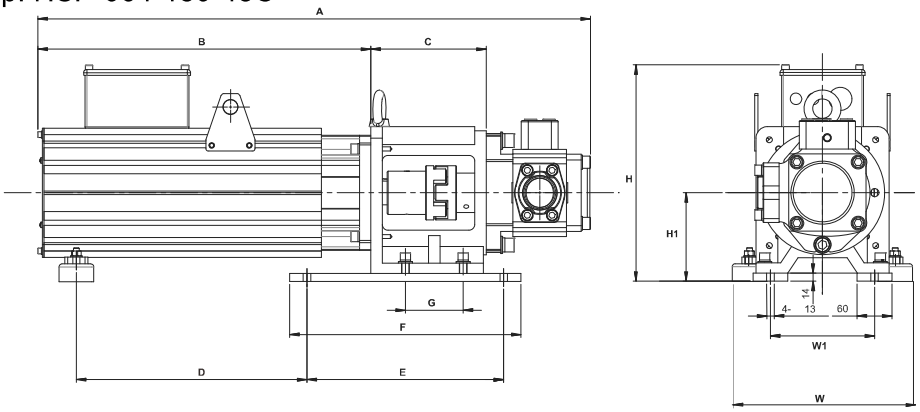


| component | model number | Quantity |
|---|---|---|
| Motor | MSJ-IR201IE42C | 1 |
| Oil pump | HSP-064-180-43C | 1 |

3 Accessory Kit: HESP-125-M-NC43

| component | model number | Quantity |
|---|---|---|
| Braking resistor | MHR1K0W014 (MH1000W) | 1 |
| Pressure sensor: WIKA A-10 | | 1 |
| Magnetic ring of power cable | | 3 |
| Sensor clamp | | 1 |
| casing tube | | 1 |

Note: An encoder cable (model number: CBHE-E5M) is in the HSP Servo oil pump packaging

4: Braking resistor: MHR1K0W014 (MH1000W)
:

(Unit：min)

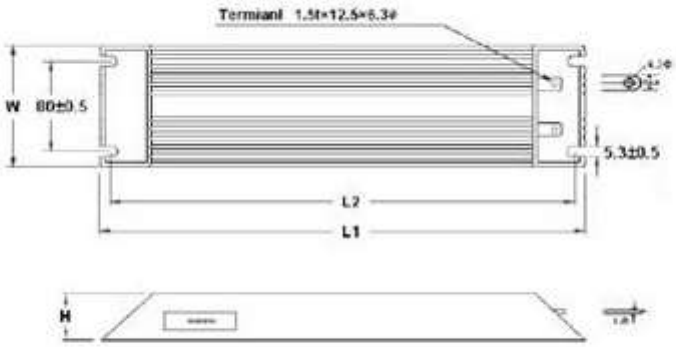


| TYPE | L1 ± 2 | L2 ± 2 | W ± 0.5 | H ± 0.5 |
|---|---|---|---|---|
| MH 1000 W | 400 | 385 | 100 | 50 |

## 20. HES160M43C

1 Servo controller: VFD300VL43B16MC

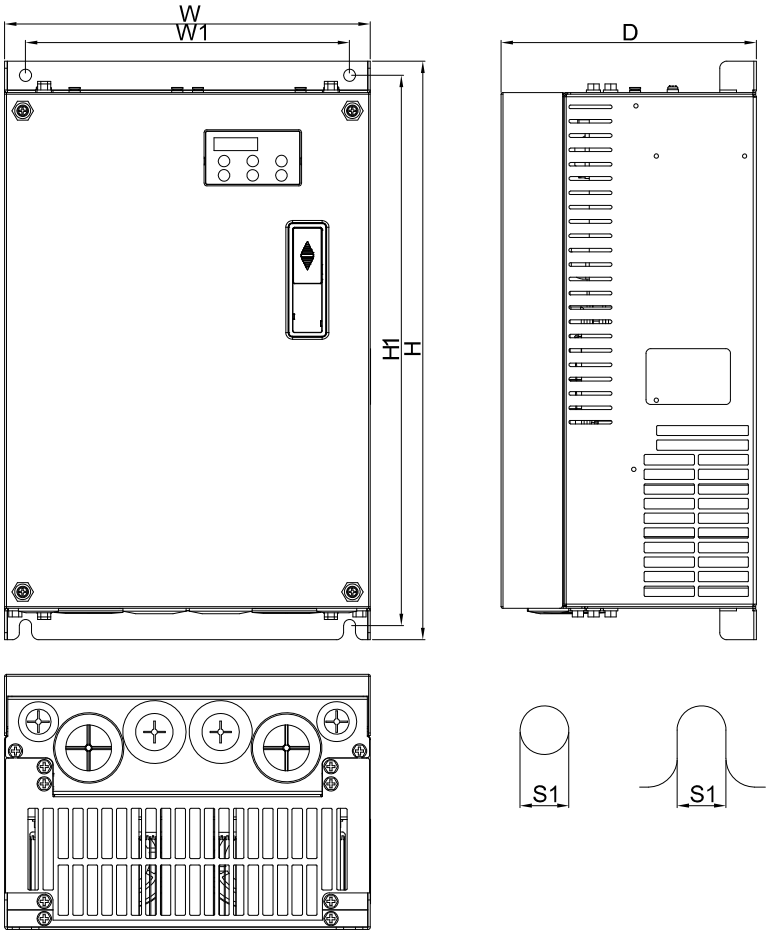


Unit：mm[inch]

| Frame | | W | H | D | W1 | H1 | S1 |
|---|---|---|---|---|---|---|---|
| D | mm | 255 | 403.8 | 168.0 | 226.0 | 384 | 8.5 |
| | inch | 10.04 | 15.90 | 6.61 | 8.90 | 15.12 | 0.33 |

2 Servo oil pump: HSP-080-230-43C

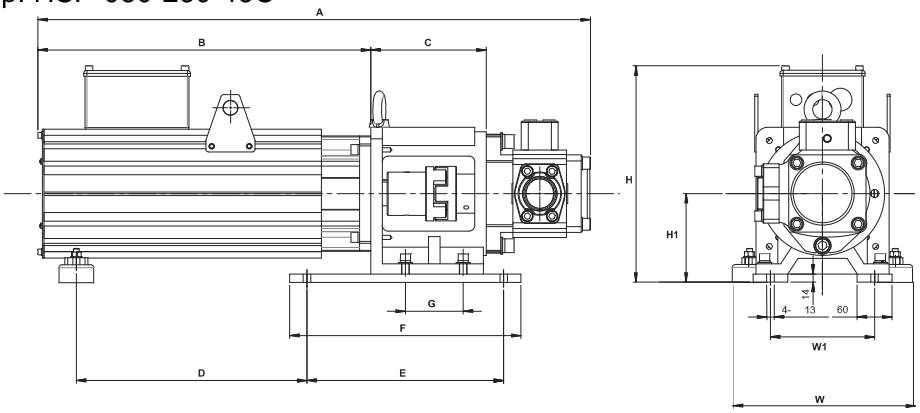


| component | model number | Quantity |
|---|---|---|
| Motor | MSJ-OR202DE42C | 1 |
| Oil pump | HSP-080-230-43C | 1 |

3 Accessory Kit: HESP-160-M-NC43

| component | model number | Quantity |
|---|---|---|
| Braking resistor | MHR1K0W014 (MH1000W) | 1 |
| Pressure sensor: WIKA A-10 | | 1 |
| Magnetic ring of power cable | | 3 |
| Sensor clamp | | 1 |
| Casing tube | | 1 |

Note: An encoder cable (model number: CBHE-E5M) is in the HSP Servo oil pump packaging

4: Braking resistor: MHR1K0W014 (MH1000W):

(Unit：mm)

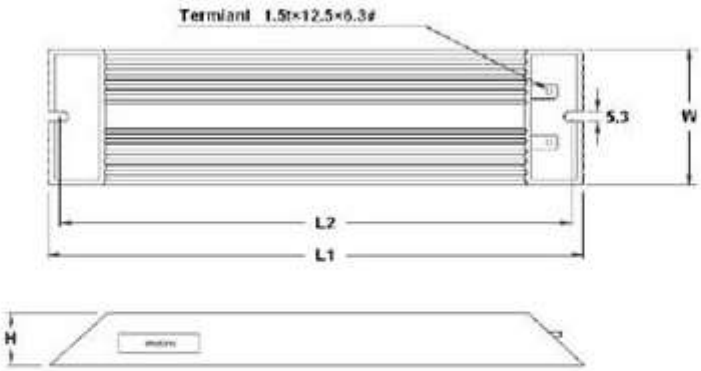


| TYPE | L1 ± 2 | L2 ± 2 | W ± 0.5 | H ± 0.5 |
|---|---|---|---|---|
| MH 300 W | 215 | 200 | 60 | 30 |

## 21. HES200M43C

1 Servo controller: VFD370VL43B20MC

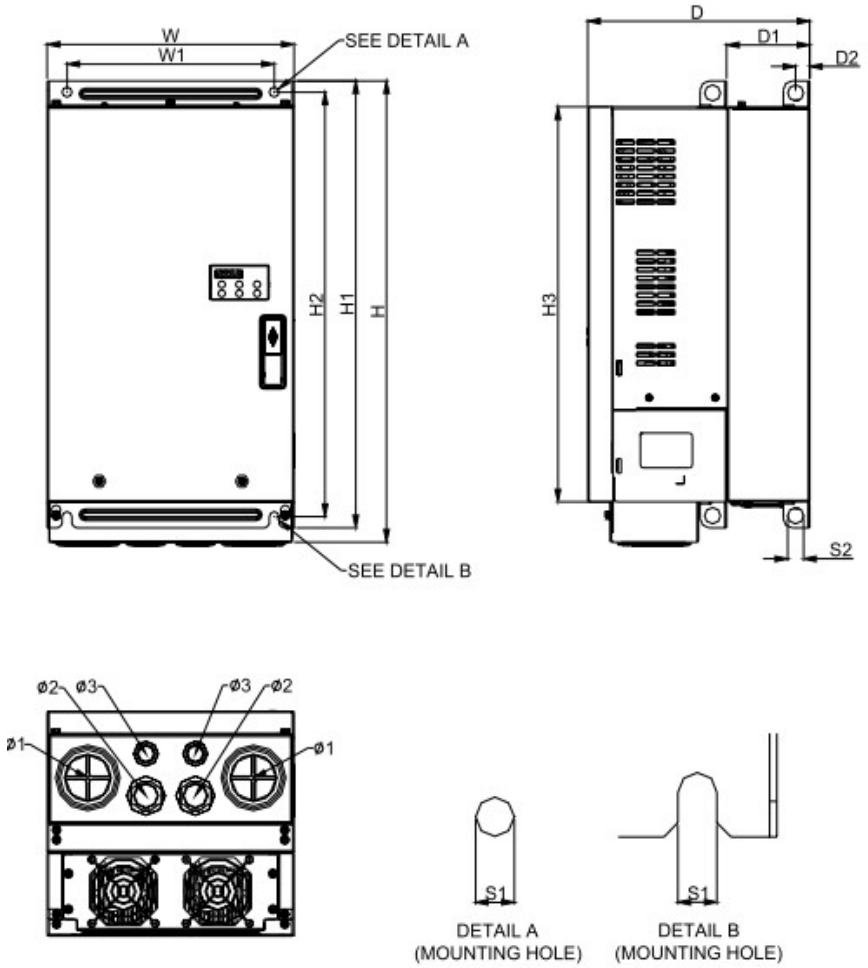


Unit：mm[inch]

| 框號 | W | W1 | H | H1 | H2 | H3 | D | D1* | D2 | S1 | S2 | Ø1 | Ø2 | Ø3 |
|---|---|---|---|---|---|---|---|---|---|---|---|---|---|---|
| **E0** | 280.0 [11.02] | 235.0 [9.25] | 516 [20.31] | 500.0 [19.69] | 475 [18.70] | 442.0 [17.40] | 251.7 [9.91] | 94.2 [3.71] | 16.00 [0.63] | 11.00 [0.43] | 18.0 [0.71] | 62.7 [2.47] | 34.0 [1.34] | 22.0 [0.87] |

2 Servo oil pump: HSP-100-250-43C

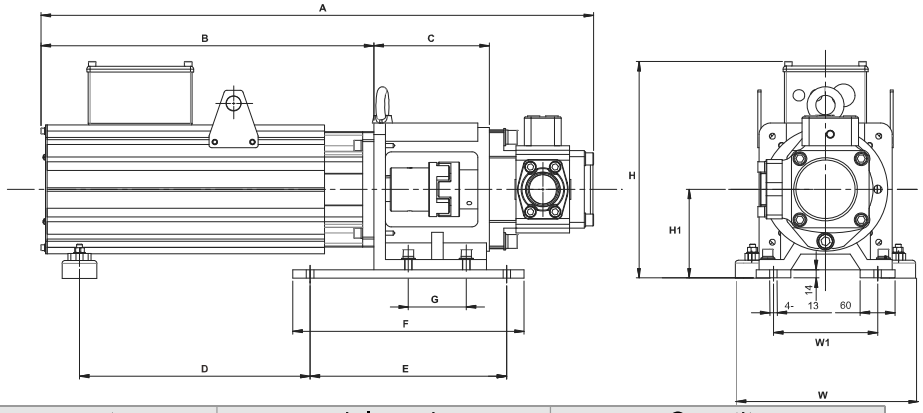


| component | model number | Quantity |
|---|---|---|
| Motor | MSJ-LR202FE42C | 1 |
| Oil pump | HSP-100-250-43C | 1 |

3 Accessory Kit: HESP-200-MBC43

| component | model number | Quantity |
|---|---|---|
| Braking resistor | MHR1K0W014 (MH1000W) | 1 |
| Pressure sensor: WIKA A-10 | | 1 |
| Magnetic ring of power cable | | 3 |
| Sensor clamp | | 1 |
| Casing tube | | 1 |

Note: An encoder cable (model number: CBHE-E5M) is in the HSP Servo oil pump packaging

4: Braking resistor: MHR1K0W014 (MH1000W)

(Unit：min)

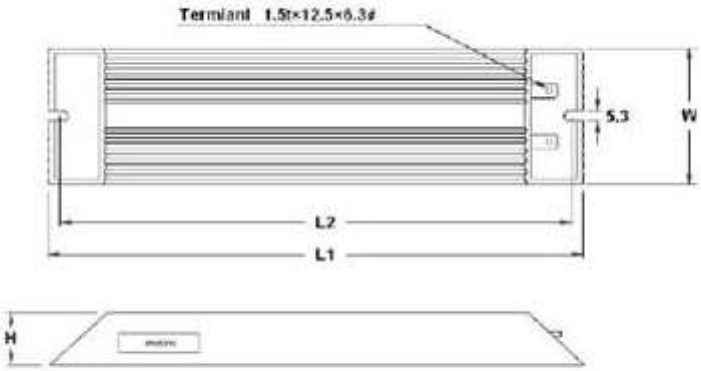


| TYPE | L1 ± 2 | L2 ± 2 | W ± 0.5 | H ± 0.5 |
|---|---|---|---|---|
| MH 300 W | 215 | 200 | 60 | 30 |

## HES C: Servo oil pump size

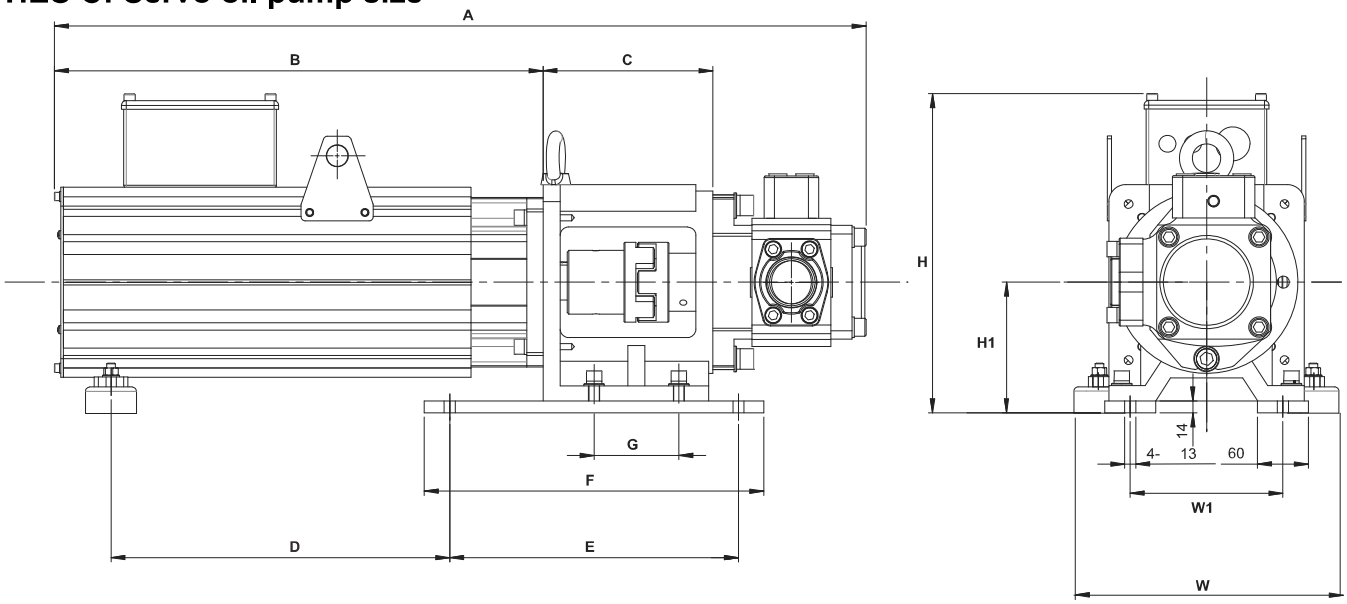


Unit：mm[inch]

| HESmodel number | A | B | C | D | E | F | G | H | H1 | W | W1 | Oil Inlet | Oil Outlet |
|---|---|---|---|---|---|---|---|---|---|---|---|---|---|
| HES063H23C | 695 | 381 | 170 | 194 | 340 | 400 | 95 | 376 | 154 | 314 | 180 | 1-1/4” PT | 3/4” PT |
| HES080H23C | 741 | 417 | | 219 | | | | | | | | | |
| HES100H23C | 752 | 417 | | 219 | | | | | | | | | 1” PT |
| HES125H23C | 802 | 453 | | 259 | | | | | | | | | |
| HES160H23C | 859 | 489 | | 304 | | | | | | | | 2” PT | 1” PT |
| HES200H23C | 956 | 575 | 200 | 399 | | | 100 | | 314 | | | 2-1/2” PT | 1-1/4” PT |
| HES250G23C | 972 | 575 | | 399 | | | | | | | | | |
| HES063H43C | 695 | 381 | 170 | 194 | | | 95 | | 154 | | | 1-1/4” PT | 3/4” PT |
| HES080H43C | 705 | 381 | | 194 | | | | | | | | | |
| HES100H43C | 752 | 417 | | 219 | | | | | | | | | 1”PT |
| HES125H43C | 802 | 453 | | 259 | | | | | | | | | |
| HES160H43C | 859 | 489 | | 304 | | | | | | | | | |
| HES200H43C | 956 | 575 | 200 | 399 | | | 100 | | | | | 2” PT | 1-1/4” PT |
| HES063M43C | 705 | 381 | 170 | 194 | | | 95 | | | | | 1-1/4” PT | 3/4” PT |
| HES080M43C | 716 | 381 | | 194 | | | | | | | | | 1” PT |
| HES100M43C | 766 | 417 | | 219 | | | | | | | | | |
| HES125M43C | 823 | 453 | | 259 | | | | | | | | | |
| HES160M43C | 870 | 489 | 200 | 324 | | | 100 | | | | | 2” PT | 1-1/4” PT |
| HES200M43C | 972 | 575 | | 399 | | | | | | | | 2-1/2” PT | |
| HES250M43C | 1028 | 577 | 230 | 275 | 420 | 500 | 140 | 458 | 184 | 426 | 250 | 2-1/2”PT | 1-1/2”PT |
| HES320M43C | 1098 | 631 | | 327 | | | | 456 | | | | 3”PT | |

# *Appendix B: Optional Accessories*

B-1 Non-fuse Circuit Breaker Chart
B-2 Reactor
B-3 Digital Keypad KPV-CE01
B-4 Communication Card
B-5 EMI Filter
B-6 Brake Unit

| | |
|---|---|
| **CAUTION** | ☑ This AC motor drive has gone through rigorous quality control tests at the factory before shipment. If the package is damaged during shipping, please contact your dealer.<br>☑ All accessories manufactured by us are to be used exclusively in the Hybrid Servo Controllers made by us. Please do not purchase accessories with unknown manufacturing information and use them on our Hybrid Servo Controllers to avoid the risk of malfunction. |

# B-1 Non-fuse Circuit Breaker Chart

UL certification: Per UL 508, paragraph 45.8.4, part a.

The rated current of the breaker shall be within 2 to 4 times rated input current of hybrid servo Controller.

Hybrid Servo Controller.

| 3-phase | |
|---|---|
| Model Number | Recommended Input Current (A) |
| VFD055VL23A-J | 50 |
| VFD055VL43A-J | 30 |
| VFD075VL23A-J | 60 |
| VFD075VL43A-J | 40 |
| VFD110VL23A-J | 100 |
| VFD110VL43A-J | 50 |
| VFD150VL23A-J | 125 |
| VFD150VL43A-J | 60 |
| VFD185VL23A-J | 150 |
| VFD185VL43A-J | 75 |

| 3-phase | |
|---|---|
| Model Number | Recommended Input Current (A) |
| VFD220VL23A-J | 175 |
| VFD220VL43A-J | 100 |
| VFD300VL23A-J | 225 |
| VFD300VL43A-J | 125 |
| VFD370VL23A-J | 250 |
| VFD370VL43A-J | 150 |
| VFD450VL43A-J | 175 |
| VFD550VL43A-J | 250 |
| VFD750VL43A-J | 300 |

Fuses of smaller amp rating than those shown in the table are allowed.

| 230V Model Number | Input Current I (A) | Line Fuse | |
|---|---|---|---|
| | | I (A) | Bussmann P/N |
| VFD055VL23A-J | 25 | 50 | JJN-50 |
| VFD075VL23A-J | 31 | 60 | JJN-60 |
| VFD110VL23A-J | 47 | 100 | JJN-100 |
| VFD150VL23A-J | 60 | 125 | JJN-125 |
| VFD185VL23A-J | 80 | 150 | JJN-150 |
| VFD220VL23A-J | 90 | 175 | JJN-175 |
| VFD300VL23A-J | 106 | 225 | JJN-225 |
| VFD370VL23A-J | 126 | 250 | JJN-250 |

| 460V Model Number | Input Current I (A) | Line Fuse | |
|---|---|---|---|
| | | I (A) | Bussmann P/N |
| VFD055VL43A-J | 14 | 30 | JJN-30 |
| VFD075VL43A-J | 18 | 40 | JJN-40 |
| VFD110VL43A-J | 24 | 50 | JJN-50 |
| VFD150VL43A-J | 31 | 60 | JJN-60 |
| VFD185VL43A-J | 39 | 75 | JJN-70 |
| VFD220VL43A-J | 47 | 100 | JJN-100 |
| VFD300VL43A-J | 56 | 125 | JJN-125 |
| VFD370VL43A-J | 67 | 150 | JJN-150 |
| VFD450VL43A-J | 87 | 175 | JJN-175 |
| VFD550VL43A-J | 101 | 250 | JJN-250 |
| VFD750VL43A-J | 122 | 300 | JJN-300 |

# B-2 Reactor

## B-2-1 AC Input Reactor

230V, 50/60Hz, 3-phase

| kW | HP | Rated Amps of AC Reactors (A) | Max. Continuous Amps of AC Reactors (A) | Inductance (mh) | |
|---|---|---|---|---|---|
| | | | | 3% Impedance | 5% Impedance |
| 5.5 | 7.5 | 25 | 37.5 | 0.5 | 1.2 |
| 7.5 | 10 | 35 | 52.5 | 0.4 | 0.8 |
| 11 | 15 | 55 | 82.5 | 0.25 | 0.5 |
| 15 | 20 | 80 | 120 | 0.2 | 0.4 |
| 18.5 | 25 | 80 | 120 | 0.2 | 0.4 |
| 22 | 30 | 100 | 150 | 0.15 | 0.3 |
| 30 | 40 | 130 | 195 | 0.1 | 0.2 |
| 37 | 50 | 160 | 240 | 0.075 | 0.15 |

460V, 50/60Hz, 3-phase

| kW | HP | Rated Amps of AC Reactors (A) | Max. Continuous Amps of AC Reactors (A) | Inductance (mh) | |
|---|---|---|---|---|---|
| | | | | 3% Impedance | 5% Impedance |
| 5.5 | 7.5 | 12 | 18 | 2.5 | 4.2 |
| 7.5 | 10 | 18 | 27 | 1.5 | 2.5 |
| 11 | 15 | 25 | 37.5 | 1.2 | 2 |
| 15 | 20 | 35 | 52.5 | 0.8 | 1.2 |
| 18.5 | 25 | 35 | 52.5 | 0.8 | 1.2 |
| 22 | 30 | 45 | 67.5 | 0.7 | 1.2 |
| 30 | 40 | 55 | 82.5 | 0.5 | 0.85 |
| 37 | 50 | 80 | 120 | 0.4 | 0.7 |
| 45 | 60 | 80 | 120 | 0.4 | 0.7 |
| 55 | 75 | 100 | 150 | 0.3 | 0.45 |
| 75 | 100 | 130 | 195 | 0.2 | 0.3 |

## AC Output Reactor Specifications

230V, 50/60Hz, 3-phase

| kW | HP | Rated Amps of AC Reactors (A) | Max. Continuous Amps of AC Reactors (A) | Inductance (mh) | |
|---|---|---|---|---|---|
| | | | | 3% Impedance | |
| 5.5 | 7.5 | 25 | 37.5 | 0.5 | 1.2 |
| 7.5 | 10 | 35 | 52.5 | 0.4 | 0.8 |
| 11 | 15 | 55 | 82.5 | 0.25 | 0.5 |
| 15 | 20 | 80 | 120 | 0.2 | 0.4 |
| 18.5 | 25 | 80 | 120 | 0.2 | 0.4 |
| 22 | 30 | 100 | 150 | 0.15 | 0.3 |
| 30 | 40 | 130 | 195 | 0.1 | 0.2 |
| 37 | 50 | 160 | 240 | 0.075 | 0.15 |

460V, 50/60Hz, 3-phase

| kW | HP | Rated Amps of AC Reactors (A) | Max. Continuous Amps of AC Reactors (A) | Inductance (mh) | |
|---|---|---|---|---|---|
| | | | | 3% Impedance | |
| 5.5 | 7.5 | 18 | 27 | 1.5 | 2.5 |
| 7.5 | 10 | 18 | 27 | 1.5 | 2.5 |
| 11 | 15 | 25 | 37.5 | 1.2 | 2 |
| 15 | 20 | 35 | 52.5 | 0.8 | 1.2 |
| 18.5 | 25 | 45 | 67.5 | 0.7 | 1.2 |
| 22 | 30 | 45 | 67.5 | 0.7 | 1.2 |
| 30 | 40 | 80 | 120 | 0.4 | 0.7 |
| 37 | 50 | 80 | 120 | 0.4 | 0.7 |
| 45 | 60 | 100 | 150 | 0.3 | 0.45 |
| 55 | 75 | 130 | 195 | 0.2 | 0.3 |
| 75 | 100 | 160 | 240 | 0.15 | 0.23 |

# Applications for AC Reactor

Connected in input circuit

## Application 1

When more than one drive is connected to the same power, one of them is ON during operation.

Question

When applying to one of the Hybrid Servo Controller, the charge current of capacity may cause voltage ripple. The Hybrid Servo Controller may damage when over current occurs during operation.

Correct wiring

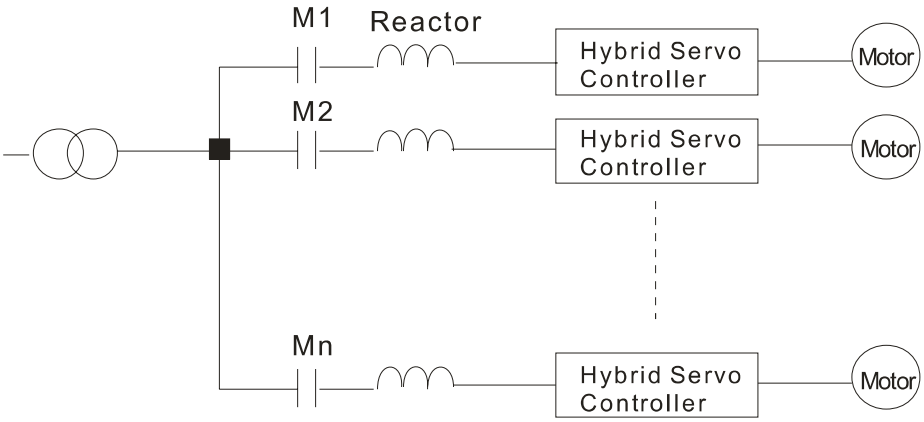


## Application 2

Silicon rectifier and Hybrid Servo Controller are connected to the same power.

Question

Surges will be generated at the instant of silicon rectifier switching on/off. These surges may damage the mains circuit.

Correct wiring

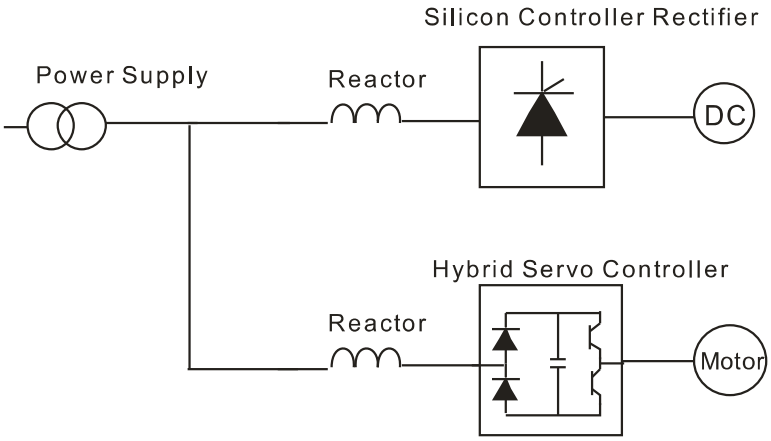

## Application 3

Used to improve the input power factor, to reduce harmonics and provide protection from AC line disturbances. (Surges, switching spikes, short interruptions, etc.). AC line reactor should be installed when the power supply capacity is 500kVA or more and exceeds 6 times the inverter capacity, or the mains wiring distance ≤10m.

Question

When power capacity is too large, line impedance will be small and the charge current will be too large. That may damage Hybrid Servo Controller due to higher rectifier temperature.

Correct wiring

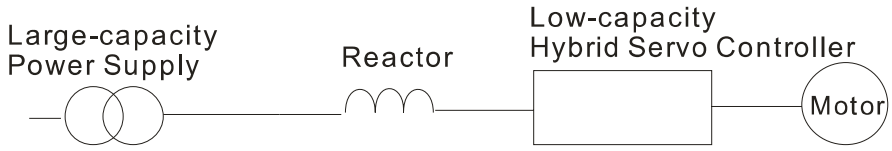

# B-2-2 Zero Phase Reactor

RF220X00A

UNIT: mm (inch)

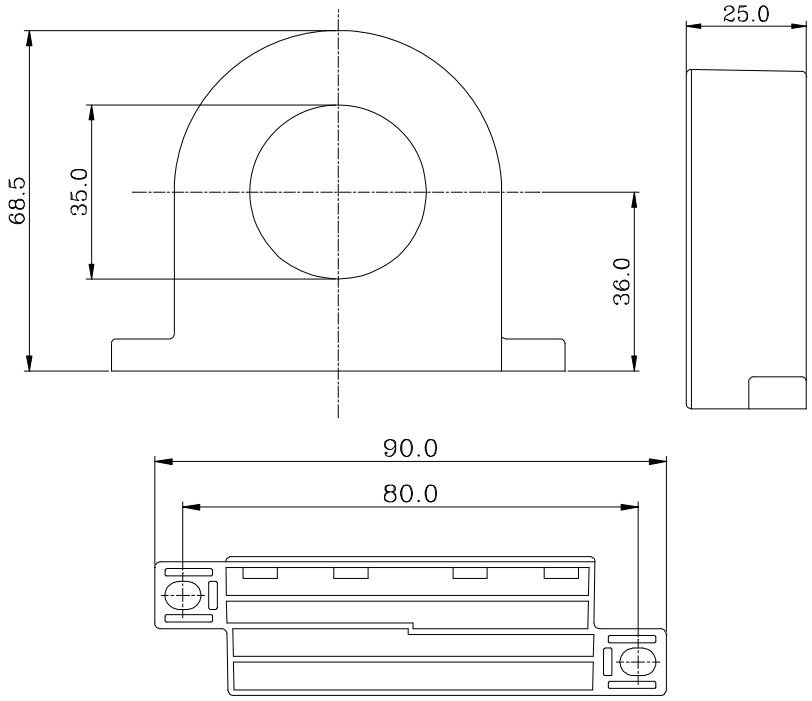


| Cable type (Note) | Recommended Wire Size ($mm^2$) | | | Qty. | Wiring Method |
|---|---|---|---|---|---|
| | AWG | $mm^2$ | Nominal ($mm^2$) | | |
| Single-core | ≤10 | ≤5.3 | ≤5.5 | 1 | Figure A |
| | ≤2 | ≤33.6 | ≤38 | 3 | Figure B |
| Three-core | ≤12 | ≤3.3 | ≤3.5 | 1 | Figure A |
| | ≤1 | ≤42.4 | ≤50 | 3 | Figure B |

**NOTE**

600V insulated power cable

1. The above table is for reference only. Please choose cables with suitable types and diameters, so that the cable must be of the right size to pass through the center of the reactor.
2. Please do not cross the ground wire. Only the motor wire or the power cable is to be threaded.
3. When long motor output cable I used, the zero-phase reactor may be needed to minimize the effect of radiation.

Figure A

Each wire must be wrapped at least three times when it threads the zero phase reactor, with the reactor placed as close to the Hybrid Servo Controller as possible.

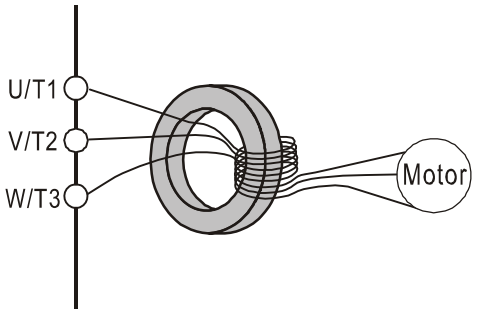


Figure B

Please thread the wire directly through the three zero phase reactors aligned in parallel.

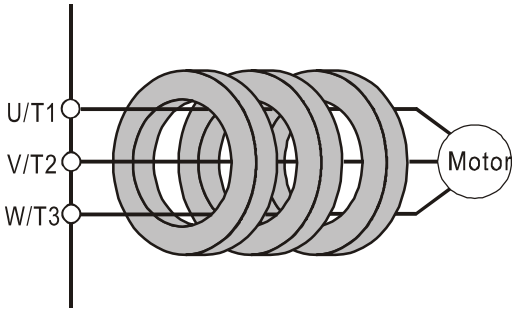

# B-2-3 DC Reactor

230V DC Choke

| Input Voltage | kW | HP | DC Amps | Inductance（mh） |
|---|---|---|---|---|
| 230$V_{AC}$ 50/60Hz 3-Phase | 5.5 | 7.5 | 32 | 0.85 |
| | 7.5 | 10 | 40 | 0.75 |
| | 11 | 15 | 62 | Built-in |
| | 15 | 20 | 92 | Built-in |
| | 18.5 | 25 | 110 | Built-in |
| | 22 | 30 | 125 | Built-in |
| | 30 | 40 | - | Built-in |
| | 37 | 50 | - | Built-in |

460V DC Choke

| Input Voltage | kW | HP | DC Amps | Inductance（mh） |
|---|---|---|---|---|
| 460$V_{AC}$ 50/60Hz 3-Phase | 5.5 | 7.5 | 18 | 3.75 |
| | 7.5 | 10 | 25 | 4.00 |
| | 11 | 15 | 32 | Built-in |
| | 15 | 20 | 50 | Built-in |
| | 18.5 | 25 | 62 | Built-in |
| | 22 | 30 | 80 | Built-in |
| | 30 | 40 | 92 | Built-in |
| | 37 | 50 | 110 | Built-in |
| | 45 | 60 | 125 | Built-in |
| | 55 | 75 | 200 | Built-in |
| | 75 | 100 | 240 | Built-in |

# B-3 Digital Keypad KPV-CE01

The digital keypad is the display of VFD-VJ series. The following keypad appearance is only for reference. See the product for actual appearance.

## Description of the Digital Keypad KPV-CE01

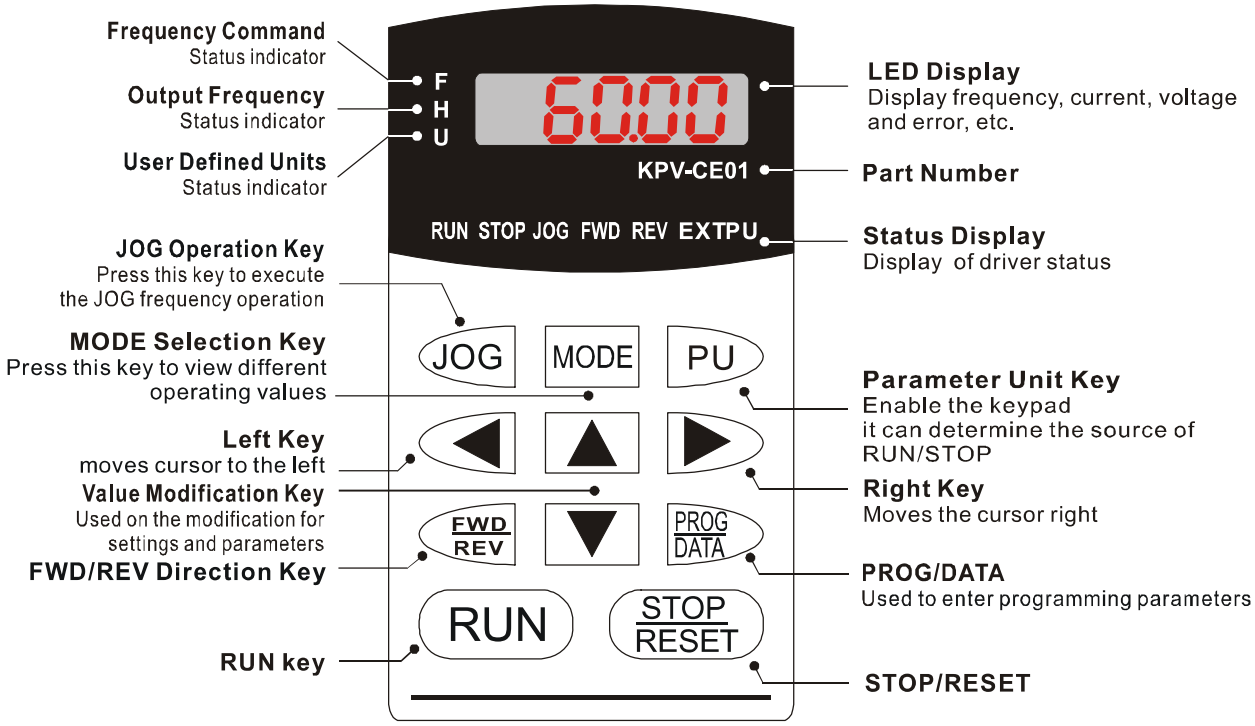


| Display Message | Description |
|---|---|
| F 60.00 | Displays the drive Master frequency. |
| H 50.00 | Displays the actual output frequency present at terminals U/T1, V/T2, and W/T3. |
| U 1800.0 | User defined unit (where U = F x Pr00-06) |
| A 5.0 | Displays the load current |
| c 20 | The counter value (C). |
| 01-00 | Displays the selected parameter. |
| 10 | Displays the actual stored value of the selected parameter. |
| EF | External Fault. |
| -End- | Display “End” for approximately 1 second if input has been accepted. After a parameter value has been set, the new value is automatically stored in memory. |
| -Err- | Display “Err”, if the input is invalid. |

# How to Operate the Digital Keypad KPV-CE01

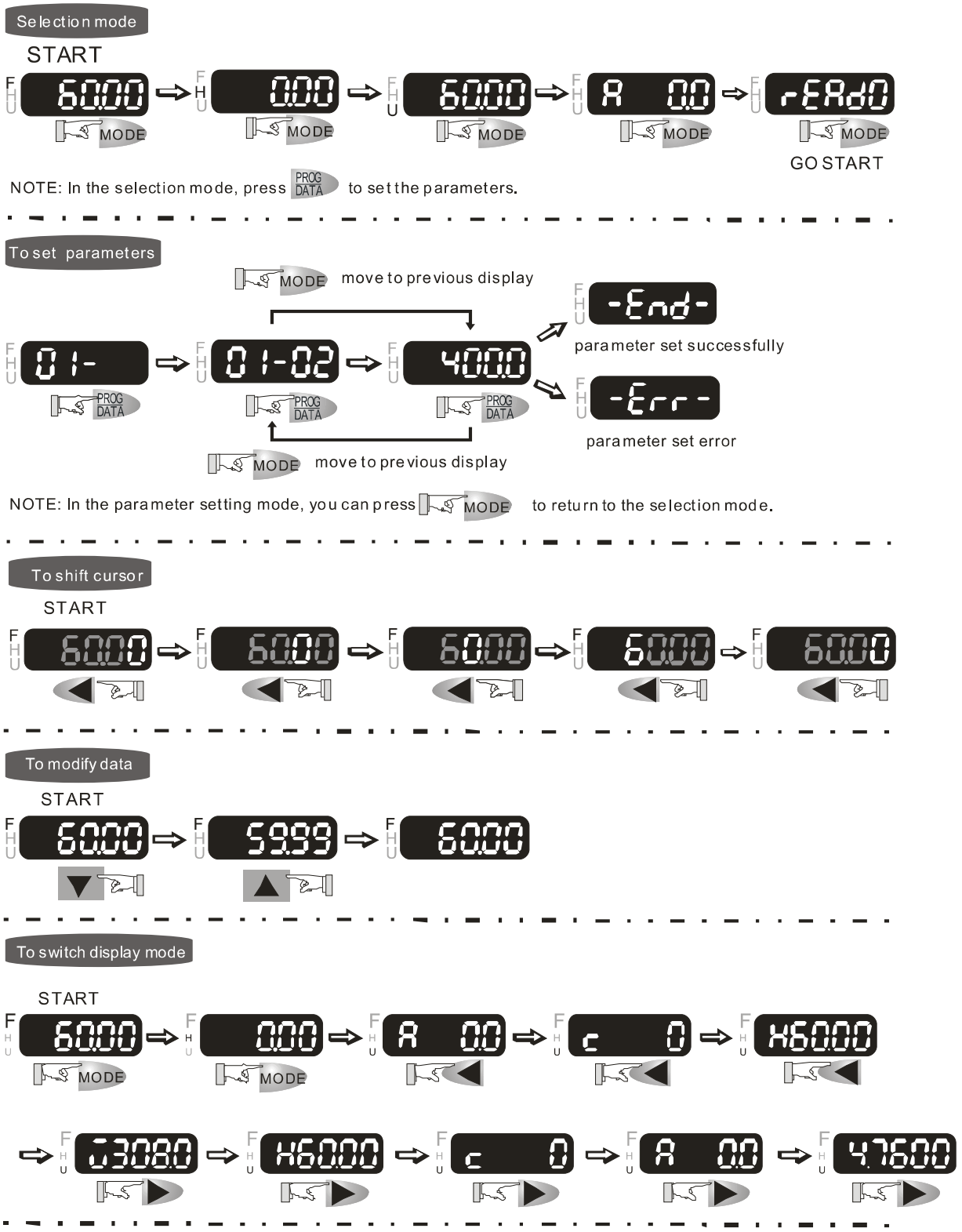

## To copy parameters 1

Copy parameters from the Drive to the KPV-CE01

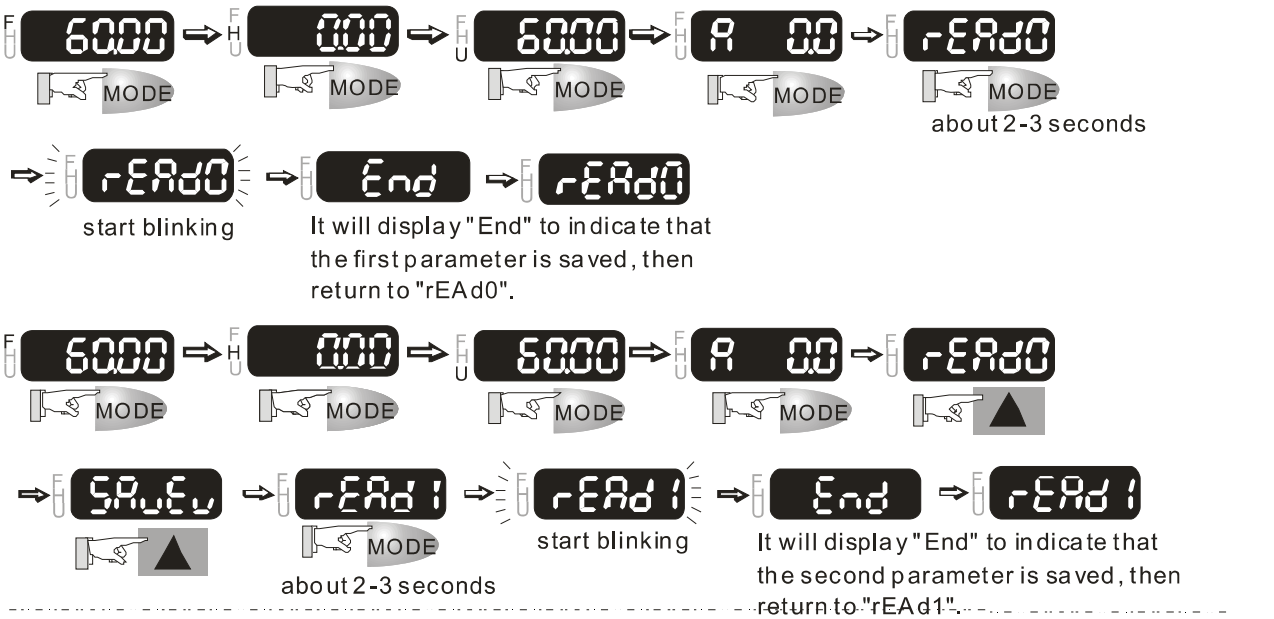


## To copy parameters 2

Copy parameters from the KPV-CE01 to the Drive

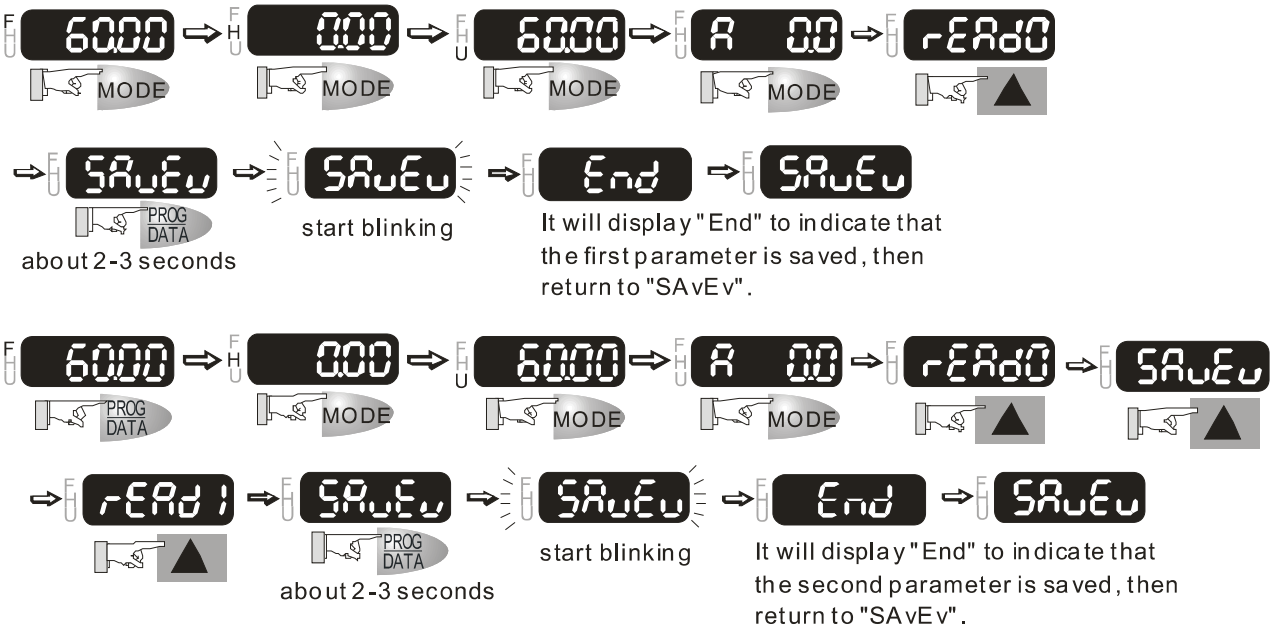

# Dimension of the Digital Keypad (KPV-CE01)

Unit: mm [inch]

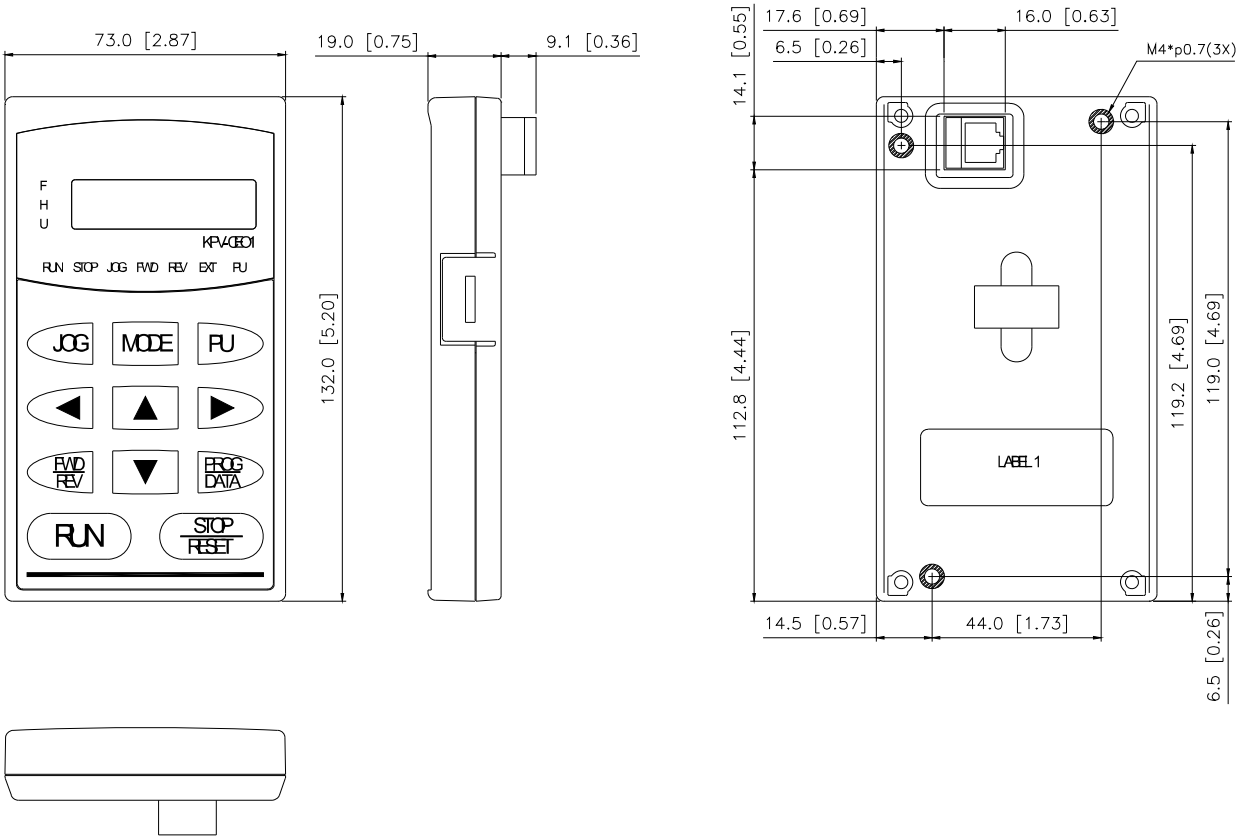


## Reference Table for the LCD Display of the Digital Keypad

| Number | 0 | 1 | 2 | 3 | 4 | 5 | 6 | 7 | 8 | 9 |
|---|---|---|---|---|---|---|---|---|---|---|
| LCD | 0 | 1 | 2 | 3 | 4 | 5 | 6 | 7 | 8 | 9 |
| English Alphabet | A | b | Cc | d | E | F | G | Hh | I | Jj |
| LCD | A | b | C c | d | E | F | G | H h | I | J j |
| English Alphabet | K | L | n | Oo | P | q | r | S | Tt | U |
| LCD | K | L | n | O o | P | q | r | S | T t | U |
| English Alphabet | v | Y | Z | | | | | | | |
| LCD | v | Y | Z | | | | | | | |

# B-4 Communication Card

EMVJ-MF01

| Terminal | Description |
|---|---|
| ⏚ | Ground |
| SG- | RS485 connection points |
| SG+ | |
| GND | Common Signal Terminal |
| POWER | Power Light |
| Tx | When the light is on, it is set as master |
| Rx | When the light is on, a message sent from the master is received |

**NOTE**

1） Use shielded twisted-pair cables for wiring to prevent voltage coupling and eliminate electrical noise and interference.

2） The shield of shielded twisted-pair cables should be connected to the SHIELD end ⏚.

# B-5 EMI Filter

| Driver | Filter Model No. | Web link of references |
|---|---|---|
| VFD150VL43A | KMF336A | http://www.dem-uk.com/roxburgh/products/emc_emi_industrial_filters/<br>KMF336A Three Phase Industrial Mains Filters - High Performance 36 Amps |
| VFD110VL23A<br>VFD185VL43A<br>VFD220VL43A | KMF350A | http://www.dem-uk.com/roxburgh/products/emc_emi_industrial_filters/<br>KMF350 Three Phase Industrial Mains Filters - General Purpose 50 Amps |
| VFD150VL23A<br>VFD300VL43A<br>VFD370VL43A | KMF370A | http://www.dem-uk.com/roxburgh/products/emc_emi_industrial_filters/<br>KMF370A Three Phase Industrial Mains Filters - High Performance 70 Amps |
| VFD185VL23A<br>VFD220VL23A | KMF3100A | http://www.dem-uk.com/roxburgh/products/emc_emi_industrial_filters/<br>KMF3100A Three Phase Industrial Mains Filters - High Performance 100 Amps |
| VFD300VL23A<br>VFD370VL23A<br>VFD550VL43A | KMF3150A | http://www.dem-uk.com/roxburgh/products/emc_emi_industrial_filters/<br>KMF3150A Three Phase Industrial Mains Filters - High Performance 150 Amps |
| VFD110VL43A | KMF325A | http://www.dem-uk.com/roxburgh/products/emc_emi_industrial_filters/<br>KMF325A Three Phase Industrial Mains Filters - High Performance 25 Amps |

## EMI Filter Installation

All electrical equipment, including drives, will generate high-frequency/low-frequency noise and will interfere with peripheral equipment by radiation or conduction when in operation. By using an EMI filter with correct installation, much interference can be eliminated. It is recommended to use DELTA EMI filter to have the best interference elimination performance.

We assure that it can comply with following rules when drive and EMI filter are installed and wired according to user manual:
1. EN61000-6-4
2. EN61800-3: 1996
3. EN55011 (1991) Class A Group 1

## General precaution

1. EMI filter and drive should be installed on the same metal plate. It is recommended to install the drive on the filter.
2. Please wire as short as possible. Metal plate should be grounded. The cover of EMI filter and drive or grounding should be fixed on the metal plate and the contact area should be as large as possible.

## Choose suitable motor cable and precautions

Improper installation and choice of motor cable will affect the performance of EMI filter. Be sure to observe the following precautions when selecting motor cable.

1. Use the cable with shielding (double shielding is the best). The shielding on both ends of the motor cable should be grounded with the minimum length and maximum contact area.
2. Remove any paint on metal saddle for good ground contact with the plate and shielding as shown in figure 1.
3. The shielding net of motor cable and the plate must be connected correctly. The shielding net on the two ends of motor cable should be fixes by the metal saddle and the plate. See figure 2 for correct connection.

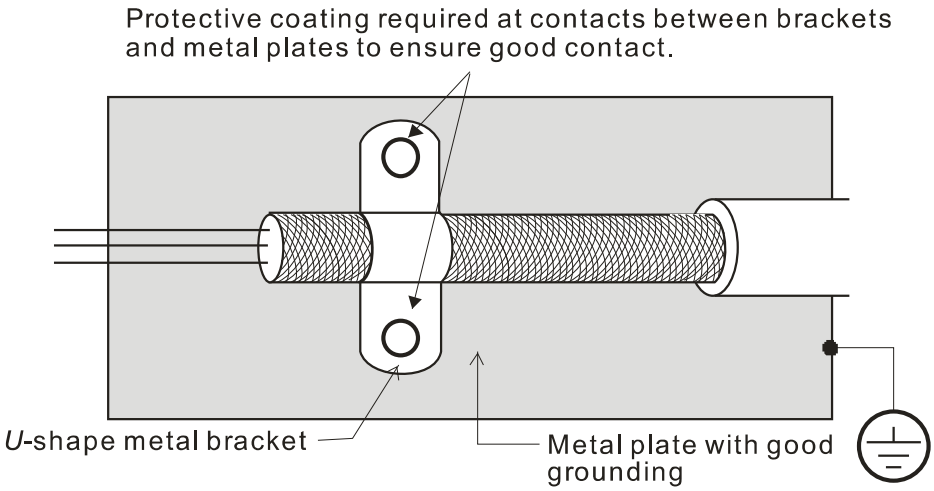


Figure 1

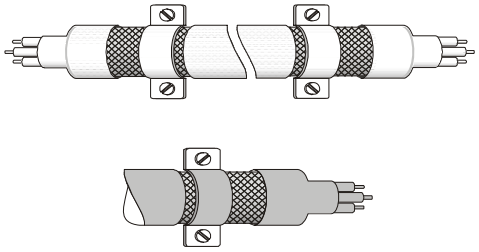

Figure 2

## The length of motor cable

When motor is driven by a drive of PWM type, the motor terminals will experience surge voltages easily due to components conversion of drive and cable capacitance. When the motor cable is very long (especially for the 460V series), surge voltages may reduce insulation quality. To prevent this situation, please follow the rules below:

Use a motor with enhanced insulation. Connect an output reactor (optional) to the output terminals of the drive. The length of the cable between drive and motor should be as short as possible (10 to 20 m or less).

For models 7.5hp/5.5kW and above:

| Insulation level of motor | 1000V | 1300V | 1600V |
|---|---|---|---|
| 460Vac input voltage | 66 ft (20m) | 328 ft (100m) | 1312 ft (400m) |
| 230Vac input voltage | 1312 ft (400m) | 1312 ft (400m) | 1312 ft (400m) |

If the length is too long, the stray capacitance between cables will increase and may cause leakage current. It will activate the protection of over current, increase leakage current or not insure the correction of current display. The worst case is that drive may damage.
To drive the 460V series motor, if there is one relay installed between the Hybrid Servo Controller and motor to protect the motor from over-heating, the relay might malfunction even if the length of the wire is below 50 meters. Thus, a filter for output current shall be added (optional for purchase).

NOTE:

- ☑ When a thermal O/L relay protected by motor is used between Hybrid Servo Controller and motor, it may malfunction (especially for 460V series), even if the length of motor cable is only 165 ft (50m) or less. To prevent it, please use a filter.
- ☑ Never connect phase lead capacitors or surge absorbers to the output terminals of the Hybrid Servo Controller.

# B-6 Brake Unit

## Individual Parts and Function Explanation

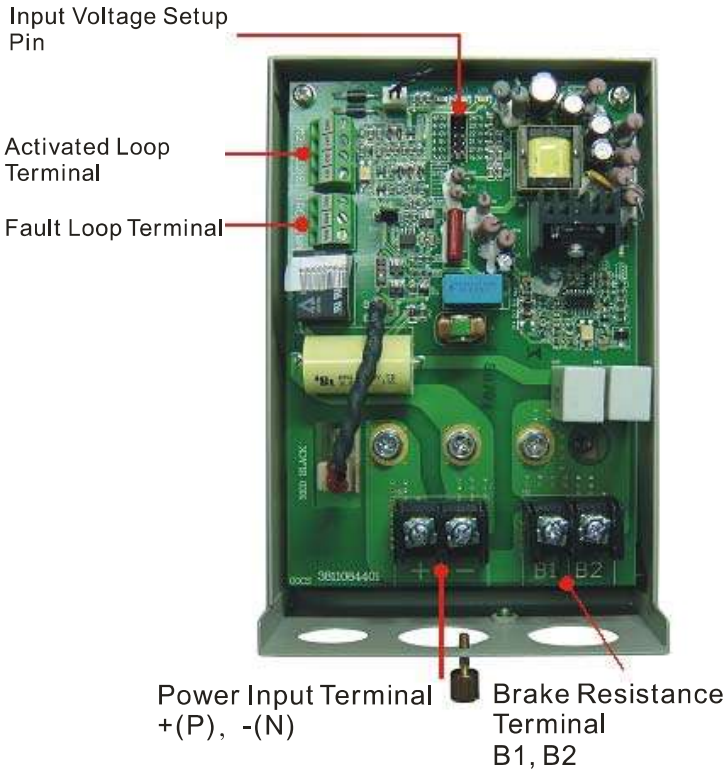


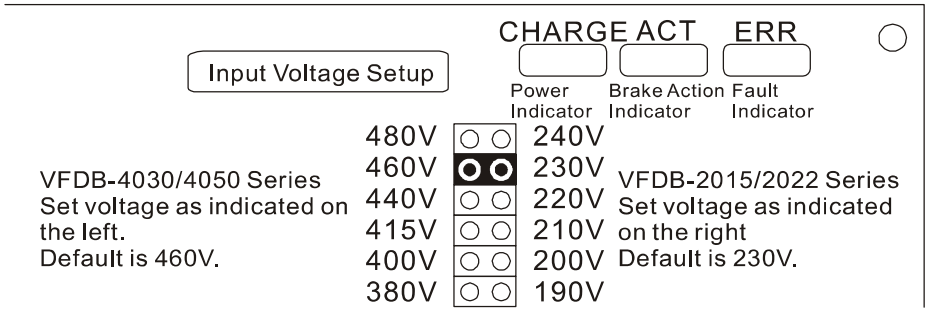


Input voltage setting for VFDB-2015/2022/4030/4045

Wiring of brake unit and motor drive:

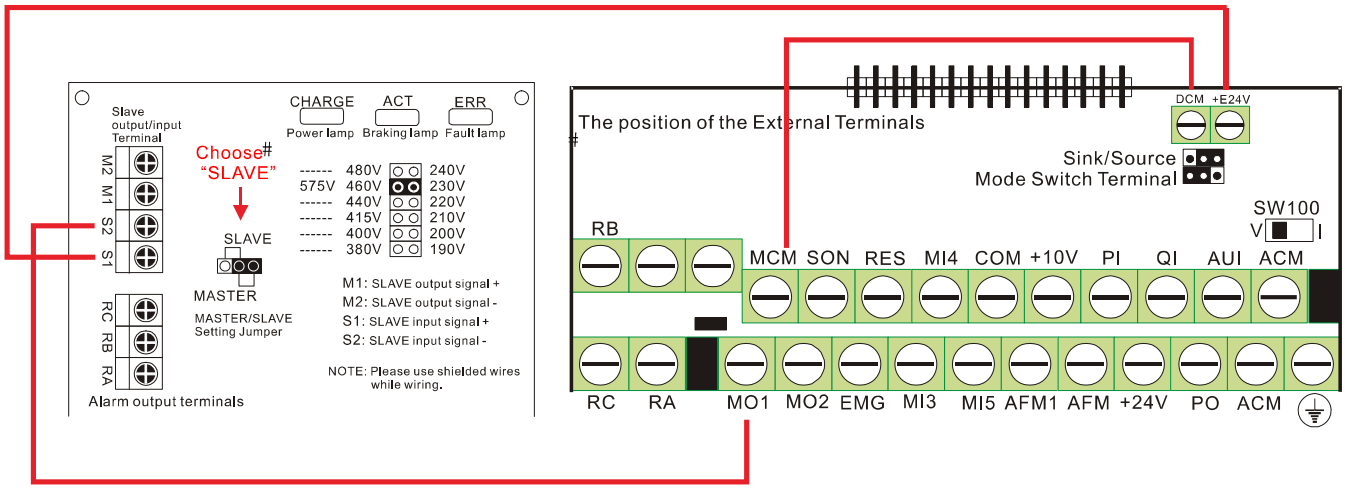

## The Voltage Settings

1. Adjust Voltage: The + (P) and － (N) sides of the hydraulic servo motor controller are the DC power source of the control unit. Therefore, after wiring and before operation, it is very important to set the voltage of the control unit according to the input voltage of the hydraulic servo motor controller. This setting will affect the state of activation voltage of the control unit. The following table shows the state address of individual voltage actions.

| Voltage: 230 VAC | Braking Start-up voltage DC Bus (+(P), -(N)) Voltage | Voltage: 230 VAC | Braking Start-up voltage DC Bus (+(P), -(N)) Voltage |
|---|---|---|---|
| 190Vac | 330Vdc | 380Vac | 660Vdc |
| 200Vac | 345Vdc | 400Vac | 690Vdc |
| 210Vac | 360Vdc | 415Vac | 720Vdc |
| 220Vac | 380Vdc | 440Vac | 760Vdc |
| 230Vac | 400Vdc | 460Vac | 800Vdc |
| 240Vac | 415Vdc | 480Vac | 830Vdc |

Table 1: The Selection of Power Voltage and Operation Potential of PN DC Voltage

## Terminal Wire Gauge

| Circuit | Terminal Mark | | Wire Gauge AWG ($mm^2$) | Screw | Torque |
|---|---|---|---|---|---|
| Power Input Circuit | + (P)、- (N) | | 10~12AWG (3.5~5.5$mm^2$) | M4 | 18 kgf-cm (15.6 in-lbf) |
| Braking Resistor | B1、B2 | | 10~12AWG (3.5~5.5$mm^2$) | M4 | 18 kgf-cm (15.6 in-lbf) |
| SLAVE Circuit | Output | M1、M2 | 20~18AWG (0.25~0.75$mm^2$) (with shielded wires) | M2 | 4 kgf-cm (3 in-lbf) |
| | Input | S1、S2 | | | |
| Fault Circuit | RA、RB、RC | | 20~18AWG (0.25~0.75$mm^2$) | M2 | 4 kgf-cm (3 in-lbf) |

## Specifications

| Voltage Class | | 230V Series | | 460V Series | |
|---|---|---|---|---|---|
| Model VFDB- | | 2022 | | 4045 | |
| Max. Motor Capacity (kW) | | 22 | | 45 | |
| Output Rating | Max. Discharge Current (A) 10%ED | 60 | | 60 | |
| | Continuous Discharge Current (A) | 20 | | 18 | |
| | Braking Start-up Voltage (DC) | 330/345/360/380/ 400/415±3V | | 660/690/720/760/ 800/830±6V | |
| Input Rating | DC Voltage | 200 ~400VDC | | 400 ~800VDC | |
| Min. Equivalent Resistor for Each Braking Unit | | 10Ω | 6.8Ω | 20Ω | 13.6Ω |
| Protection | Heat Sink Overheat | Temperature over +95°C (203°F) | | | |
| | Alarm Output | Relay contact 5A120Vac/28Vdc(RA.RB.RC) | | | |
| | Power Charge Display | Blackout until bus (+~-) voltage is below 50VDC | | | |
| Environment | Installation Location | Indoor (no corrosive gases, metallic dust) | | | |
| | Operating Temperature | -10°C ~+50°C (14ºF to 122ºF) | | | |
| | Storage Temperature | -20°C ~+60°C (-4ºF to 140ºF) | | | |
| | Humidity | 90% Non-condensing | | | |
| | Vibration | 20Hz 以下 9.8m/$S^2$(1G)、20~50Hz 2m/$S^2$(0.2G) | | | |
| Mechanical Configuration | | Wall-mounted enclosed type IP50 | | | |